A10VSO Series
Variable Displacement Pump

PIONEER FLURD POWER

Product show and brief introduction

规格Size 18~140 系列 series 31

额定压力 Nominal pressure 280Bar

峰值压力 Peak pressure 350Bar

斜盘式轴向柱塞泵Swash plate design axial variable piston pump

特 点 Features

1、用于开式回路的斜盘式轴向柱塞泵。
Swash plate design axial variable piston pump used in open circuit.

2、连续工作压力可达280bar，瞬时最高工作压力可达350bar。
Continuous working pressure can reach 280bar,the highest instantaneous working pressure can reach 350bar.

3、流量正比于驱动转速和排量，并可通过调节斜盘倾角实现无级变量。
The flow is directly proportional to the drive rotate speed and the displacement, and can make stepless variable come true by adjusting the obliquity of the swash plate.

4、有恒压、恒功率恒压、恒压恒流量等多种控制方式，且控制响应速度快。
Wide range of controls such as DR,DFR,DFLR etc. Short response times.

5、低噪音、高效率、高可靠性、长寿命。
Low noise level, high efficiency, high reliability and long service life.

6、体积小、功率密度高。
Small volume, High power density.

7、优良的吸油性能。
Excellent oil absorbency.

8、驱动轴能承受轴向和径向负载。
Axial and radial loading of drive shaft possible.

9、SAE及ISO安装法兰。
SAE and ISO mounting flange.

10、可供通轴结构，用于多回路系统。
Thru drive option for multi- circuit system.

Model Code

A10V(S)	O	28	DR	/	31	R	–	P	S	C	62	N00

泵型号:变量泵;斜盘式结构

Model Variable pump,Swashplate design

额定压力280bar

Rated pressure 280bar

峰值压力350bar

Peak pressure 350bar

运行模式：泵,开式回路

Mode of operation Pump,Circuit

规格排量:18、28、45、71、100、140(ml/r)

Displacement 18.28.45.71.100.140(ml/r)

控制方式:

Controller	18	28	45	71	100	140
DG--两位控制 Two point,direct control						
DR--恒压控制 Pressure control	√	√	√	√	√	√
DRG--远程恒压控制 Remote pressure control	√	√	√	√	√	√
DFR--压力/流量控制 Pressure and flow control	√	√	√	√	√	√
DFR1--压力/流量控制, X口关闭 Pressure and flow control Orifice in X-channel closed	√	√	√	√	√	√
DFLR--压力/流量/功率控制 Pressure,flow,torque control		√	√	√	√	√

产品系列: 31系列;

Series 31 Series

转向(从轴端看): R--顺时针 Clockwise

Direction of Rotation L--逆时针 Anti-clockwise

密封件: P--丁腈橡胶 Perbunan

Seals V--氟橡胶 Viton

油口型式:

Port for service lines	18	28	45	71	100	140
11--后面SAE, 公制螺纹 SAE flage rear, fixing thread metric		√	√	√	√	
61--后面SAE,UNC螺纹 SAE flage rear, fixing thread UNC		√	√	√	√	
12--两侧SAE, 公制螺纹 SAE flage on opposite side,fixing thread metric	√	√	√	√	√	√
62--两侧SAE, UNC螺纹 SAE flage on opposite side,fixing thread UNC	√	√	√	√	√	√
41(91)--后面SAE, 公制(UNC)螺纹 SAE flage rear, fixing thread metric(UNC)				√		
42(92)--两侧SAE, 公制(UNC)螺纹 SAE flage on opposite side,fixing thread metric(UNC)				√		

安装法兰:

Mounting flange	18	28	45	71	100	140
A--ISO两孔 ISO 2-hole	√	√	√	√	√	
C--SAE两孔 SAE 2-hole	√	√	√	√	√	
B--ISO四孔 ISO 4-hole						√
D--SAE四孔 SAE 4-hole						√

轴端型式:

Shaft end	18	28	45	71	100	140
P--公制平键 Metric parallel with key	√	√	√	√	√	√
S--SAE花键 SAE splined	√	√	√	√	√	√
R--SAE花键(较高通轴驱动扭矩) SAE splined (higher through drive torque)	√	√	√	√		
K--SAE平键 SAE parallel with key	√	√	√	√	√	√
U--SAE小花键 SAE splined,reduced dia. not for through drive	√		√		√	
W--SAE小花键(较高不通轴驱动扭矩) Similar to shaft "U", higher input torque, not for through drive			√		√	

通轴型式: With through drive to accept an axial piston pump or a gear pump				18	28	45	71	100	140	
不通轴 Without through drive				√	√	√	√	√	√	N00
安装法兰 Mounting flage	轴/轴套 Shaft/coupling		用于安装 For the mounting of							
ISO 80,2 hole	3/4"	19-4(SAE A-B)	HA10VSO10-18(shaft S or R)	√	√	√	√	√	√	KB2
ISO 100,2 hole	7/8"	22-4(SAE B)	HA10VSO28(shaft S or R)		√	√	√	√	√	KB3
ISO 100,2 hole	1"	25-4(SAE B-B)	HA10VSO45(shaft S or R)			√	√	√	√	KB4
ISO 125,2 hole	1 1/4"	32-4(SAE-C)	HA10VSO71(shaft S or R)				√	√	√	KB5
ISO 125,2 hole	1 1/2"	38-4(SAE C-C)	HA10VSO100(shaft S)					√	√	KB6
ISO 180,4 hole	1 3/4"	44-4(SAE D)	HA10VSO140(shaft S)						√	KB7
SAE 82-2,2 hole	5/8"	16-4(SAE A)	HA10VSO10-18(shaft U),1PF2G2,PGF2	√	√	√	√	√	√	K01
SAE 82-2, 2 hole	3/4"	19-4(SAE A-B)	HA10VSO10-18(shaft S or R)	√	√	√	√	√	√	K52
SAE 101-2, 2 hole	7/8"	22-4(SAE B)	1PF2G3		√	√	√	√	√	K02
SAE 101-2, 2 hole	7/8"	22-4(SAE B)	HA10VSO28(shaft S or R),PGF3		√	√	√	√	√	K68
SAE 101-2, 2 hole	1"	25-4(SAE B-B)	HA10VSO45(shaft S or R),PGH4			√	√	√	√	K04
SAE 127-2, 2 hole	1 1/4"	32-4(SAE C)	HA10VSO71(shaft S or R)				√	√	√	K07
SAE 127-2,2 hole	1 1/2"	38-4(SAE C-C)	HA10VSO100(shaft S),PGH5					√	√	K24
SAE 152-4,4 hole	1 3/4"	44-4(SAE D)	HA10VSO140(shaft S)						√	K17
ISO 80-2	带键轴Φ18			√	√	√	√	√	√	K51
SAE A 82-2	花键轴Φ19.05			√	√	√	√	√	√	K40
ISO 100-2	带键轴Φ22				√	√	√	√	√	K25
SAE B 101-2	带键轴Φ22.225				√	√	√	√	√	K03
ISO 100-2	带键轴Φ25					√	√	√	√	K26
SAE B 101-2	带键轴Φ25.4					√	√	√	√	K05
ISO 125-2	带键轴Φ32						√	√	√	K27
SAE B 127-2	带键轴Φ31.75						√	√	√	K08
ISO 125-2	带键轴Φ40							√	√	K37
SAE C 127-2	带键轴Φ38.1							√	√	K38
ISO 180-4	带键轴Φ45								√	K59
SAE B 152-4	带键轴Φ44.45								√	K21

二、 结构图 Construction

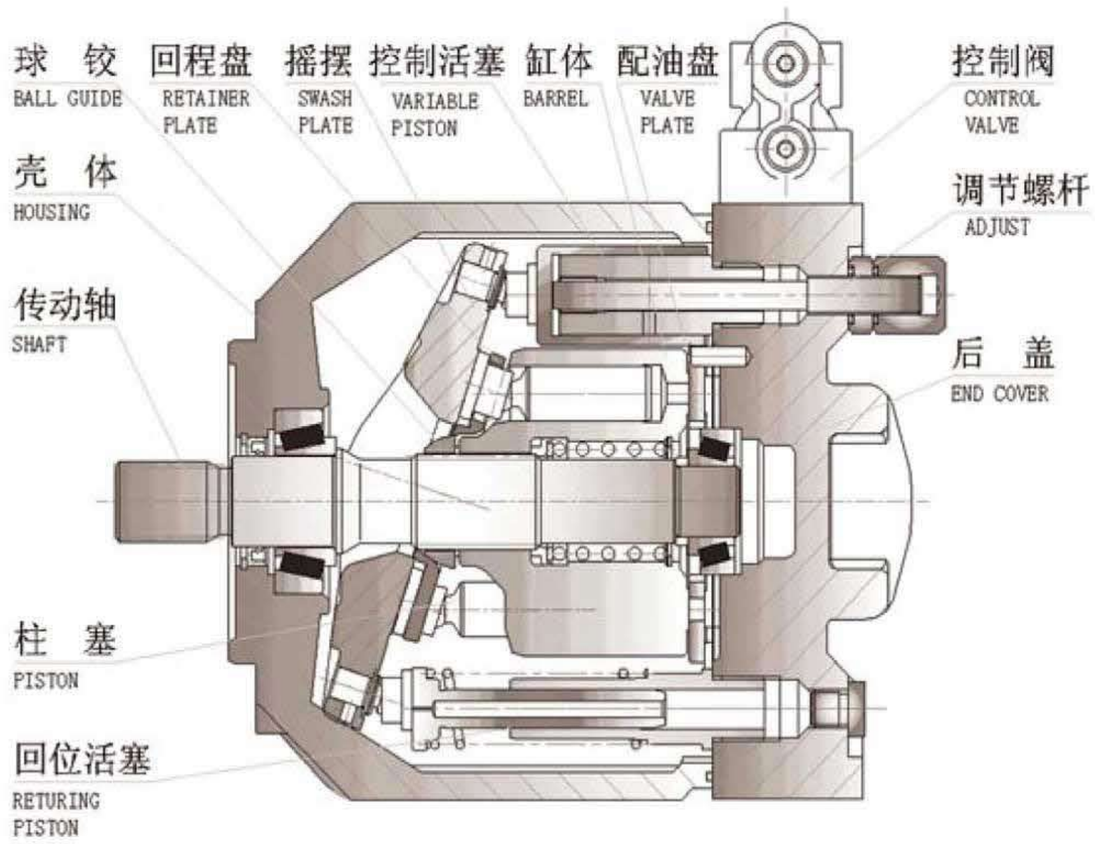

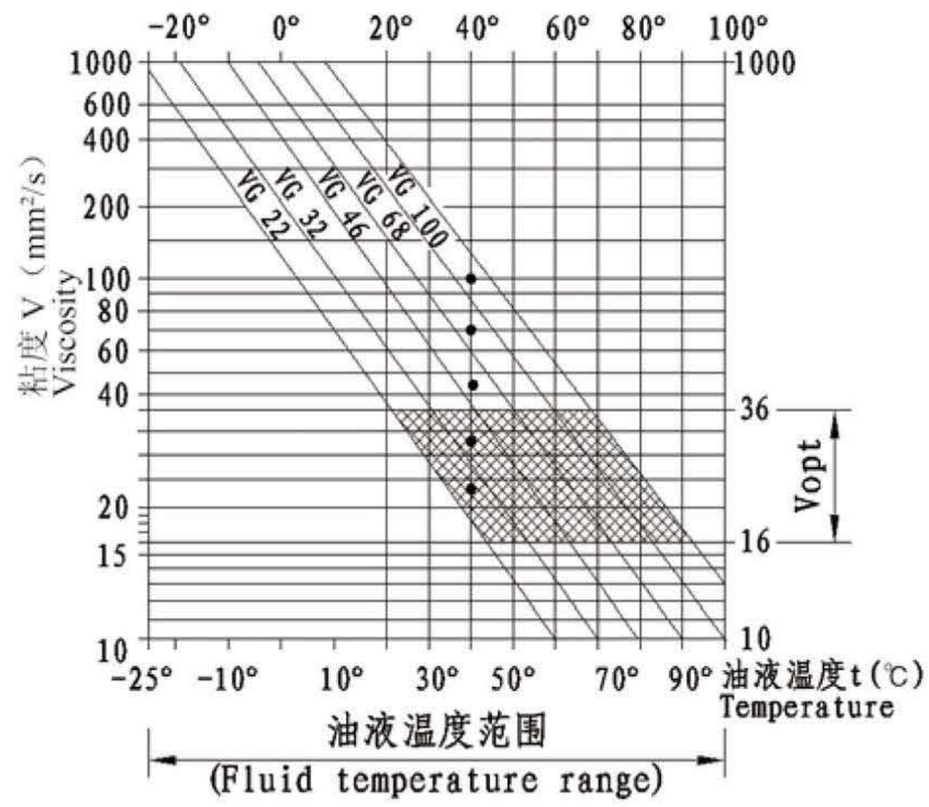

三、 油液 Hydraulic fluid

•适用于矿物油。

The HA10VSO variable displacement pump is suitable for use with mineral oil.

•工作粘度范围 Operating viscosity range

为了得到最佳的效率和寿命，我们推荐把油液的工作粘度（在相应的工作温度下）选择在以下范围内:

In order to obtain optimum efficiency and service life ,we recommend that the operating viscosity(at operating temperature) be selected from within the range.

V_{opt}=最佳工作粘度 opt. operating viscosity

16…36 mm^2/s

与油箱温度（开式油路）相关。

Referred to the reservoir temperature(open circuit).

•粘度范围的限制 Viscosity limits

V_{min}=10mm^2/s 短时间在90℃油温的最大泄漏情况下最大粘度 short term at a max. permissible drain of 90℃ .

V_{max}=1000mm^2/s 短时间冷起动时short term on cold start

•温度范围Temperature range (see selection diagram):t=-25～90℃

•选用油液的注意事项Notes on the selection of the hydraulic fluid.

为了正确地选用液压油，必须知道油箱中油液工作温度(开式回路)和环境温度的关系。In order to select the correct fluid , it is necessary to know the operating temperature in the tank (open loop) in relation to the ambient temperature. 根据选用图表，应确保在油液的工作温度范围内，油液的粘度在最佳粘度范围（V opt在阴影范围），并建议在同时可选用的不同等级中尽可能选较高粘度等级。The hydraulic fluid should be selected so that within the operating temperature range, the operating viscosity lies within the optimum range (Vopt) (see shaded section of the selection diagram). We recommend that the higher viscosity range should be chosen in each case.

•油液的过滤 Filtration

滤油越精细，工作液体的清洁度越好，则泵的寿命越长。为了保证柱塞泵元件的正常功能，油液的清洁度至少为: NAS 1638.9级别 ，ISO/DIS4406的18/15级。

The finer the filtration the better the cleanliness of the pressure fluid and the longer the life of the axial piston unit.To ensure the functioning of the axial piston unit a minimum cleanliness level of: 9 to NAS 1638 18/15 to ISO/DIS 4406 is necessary.

四、机械排量限制器 Mechanical displacement limiter

机械排量限制器仅能用于不通轴的N00系列泵，通轴泵则不能用。

Mechanical displacement limiter is possible on the nonthrough-drive model, N00 series but not for the model with through-drive.

$V_{g\,max}$：用于规格18~140； for sizes 18 to 140

设定范围从$V_{g\,max}$到50% $V_{g\,max}$，无级变化； Setting range $V_{g\,max}$ to 50% $V_{g\,max}$ stepless

$V_{g\,min}$：用于规格100、140；for sizes 100 and 140

设定范围从$V_{g\,min}$到50% $V_{g\,max}$，无级变化；Setting range $V_{g\,min}$ to 50% $V_{g\,max}$ stepless

五、主要参数 Parameter

进油口工作压力范围

Operating pressure range - inlet

进油口（S口）的绝对压力

Absolute pressure at port S

$P_{abs\,min}$----------0.8 bar

$P_{abs\,max}$----------30 bar

出油口工作压力范围

Operating pressure range - outlet

出油口（B口）压力Pressure at port B

公称压力Nominal pressure P_N----------280 bar

峰值压力Peak pressure P_{max}----------350 bar

间隙工作压力（占10%循环周期）------315 bar

Applications with intermittent operating pressures up to 315 bar at 10% duty are permitted.

壳体泄油压力 Case drain pressure

泄油口(L，L_1)最大允许压力：最高可比进油口压力高0.5bar，但不得高于2bar 的绝对压力。

Maximum permissible pressure of leakage fluid (at port L, L_1):Maximum 0,5 bar higher than the inlet pressure at port S, but nohigher than 2 bar absolute pressure.

规格 Sizes				18	28	45	71	100	140
排量 Displacement	$V_{g\,max}$ cm^3			18	28	45	71	100	140
最高转速 Max speed	n_{max} rpm			3300	3000	2600	2200	2000	1800
最大流量Max. flow	在in n_{max}	q_v	L/min	59.4	84	117	156	200	252
	在in 1500 r/min			27	42	68	107	150	210
最大功率（Δp=280bar) Max. power	在in n_{max}	P_{max}	Kw	27.7	39	55	73	93	118
	在in 1500 r/min			12.6	20	32	50	70	98
最大扭矩（Δp=280bar) Max. torque	在in $V_{g\,max}$	Tmax	Nm	80.1	125	200	316	445	623
重量Weight		m	Kg	12	15	21	33	45	60

参数关系：Parameter relations

流量Flow $q_v = \dfrac{V_g \cdot n \cdot \eta_v}{1000}$ [L/min]

驱动转矩 Drive Torque $T = \dfrac{1.59 \cdot V_g \cdot \triangle p}{100 \cdot \eta_{mh}} = \dfrac{V_g \cdot \triangle p}{20 \cdot \pi \cdot \eta_{mh}}$ [Nm]

驱动功率 Drive Power $P = \dfrac{T \cdot n}{9549} = \dfrac{2\pi \cdot T \cdot n}{60000} = \dfrac{q_v \cdot \triangle p}{600 \cdot \eta_t}$ [kw]

V_g = 每转几何排量［cm^3］Geometry displacement each rotate

Δp = 压差 [bar] Pressure drop/differential

n = 转速［rpm］Rotary speed

η_v = 容积效率 Cubage’s efficiency

η_{mh} = 机械-液压效率Mechanical-Hydraulic efficiency

η_t = 总效率（$\eta_t = \eta_v \times \eta_{mh}$）Overall efficiency

六、安装注意事项

流量160L/min及以上的泵不建议安装在油箱上，以下的泵可安装于油箱上，但要确保油箱盖有足够的刚度。与原动机的输出轴安装精度(同心度、垂直度)≤0.05mm。在试运行前，泵内必须灌满油液并在工作时保持充满。为了减低噪声，提高系统的可靠性，建议所有油泵尽可能下置于油箱安装。进油管路不允许安装滤网，建议系统采用出油或系统回油管路过滤。

1、垂直安装（轴端向上）

1.1安装于油箱内

安装前先灌满油液并使其处于水平位置。

a)当油箱的最低液面高于或等于安装法兰面时,将 “L”堵死，而将“L_1”和进油口“S”打开, 建议按图1配管。

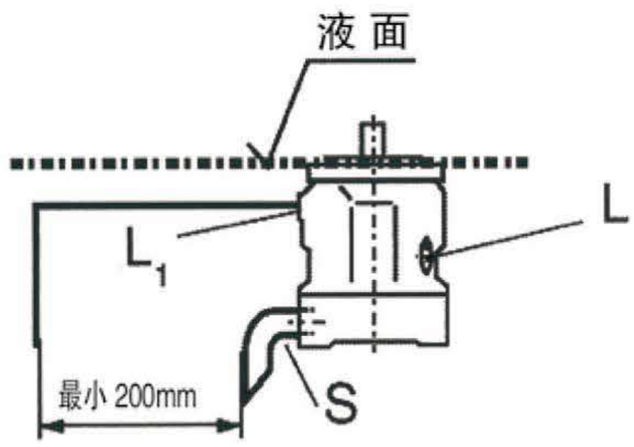

图1

b)如果油箱的最低液面低于泵的安装法兰面，则封闭泄油口“L”，泄油口“L_1”及进油口“S”按图2配管，并参见1.2.1节。

1.2安装在油箱外面

在安装前泵置于水平位置并灌满油液。如安装于油箱的上方，参见图2。

1.2.1在静态和动态情况下泵的最低吸油压力均为

P_{absmin}=0.8bar

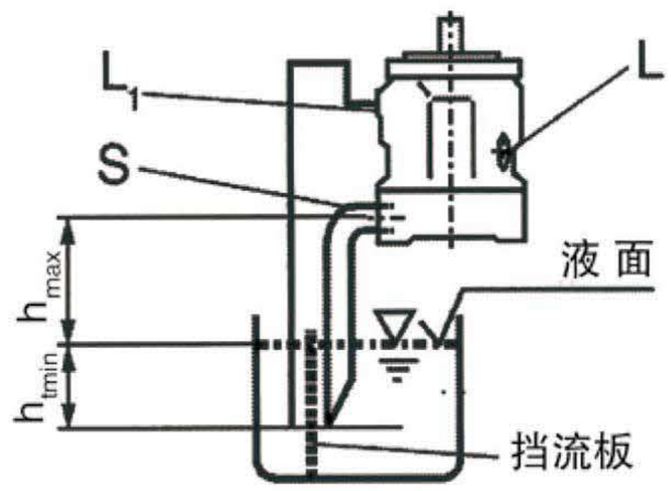

图 2

1.2.2此种方法安装时最大吸油口高度h_{max}=500mm;具体视吸油管路的阻力损失而定。阻力损失较大时，吸油高度尽量要小，吸油口的最小浸没深度h_{tmin}=200mm。

2、水平安装（轴端水平）

水平安装时应确保泄油口“L”或“L_1”处于顶部。

2.1 安装在油箱内

a)当油箱的最低液面在泵顶端之上时，把泄油口“L_1”堵住，泄油口“L”、进油口“S”配管参见图3。

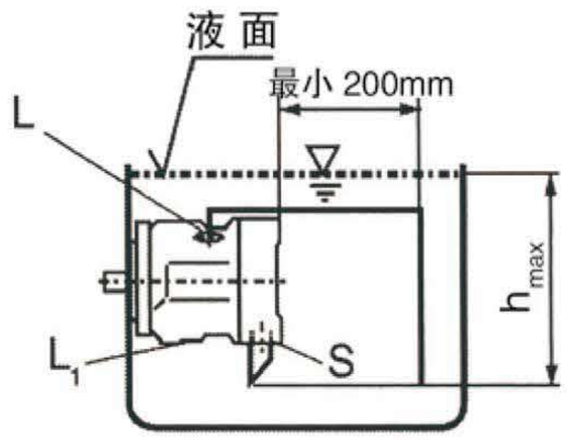

图3

b)当油箱的最低液面低于泵的顶部时，将泄油口“L_1”堵住，泄油口“L”、进油口“S”的配管要求参见图4，注意 h_{tmin}=200mm, h_{max}=500mm

2.2 安装在油箱外面

将位于下面的泄油口“L”或“L_1”堵住，将壳体内灌满油。

a) 安装在油箱上，泄油口“L”及进油口“S”配管请参见图4。

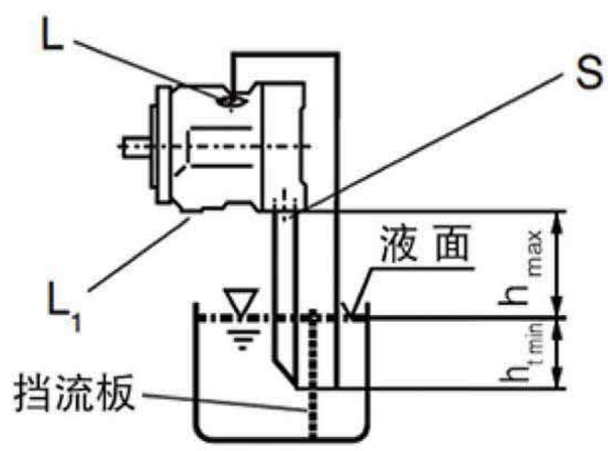

图4

c) 如安装在油箱下，泄油口“L_1”及进油口“S”配管请参见图5。

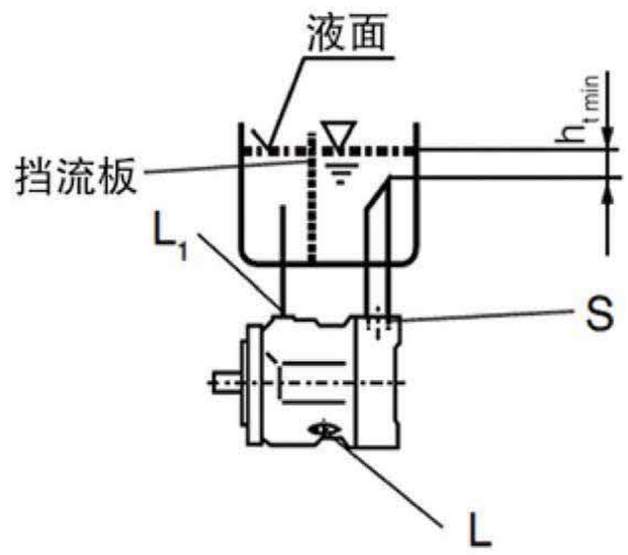

图5

Installation Notes

Optional installation position. The pump housing must be filled with fluid during commissioning and remain full when operating. In order to attain the lowest noise level, all connections (suction,pressure, case drain ports) must be linked by flexible couplings to tank.
Avoid placing a check valve in the case drain line.

1. Vertical installation (shaft end upwards)
The following installation conditions must be taken into account:

1.1. Arrangement in the reservoir
Before installation fill pump housing, keeping it in a horizontal position.
a) If the minimum fluid level is equal to or above the pump mounting face close port "L"plugged, leave ports"L_1" and "S" open; L_1 piped and recommendation S piped (see Fig.1).
b) If the minimum fluid level is below the pump mounting face pipe port "L_1" and "S" according to Fig. 2.
Close port "L" with respect taking into consideration

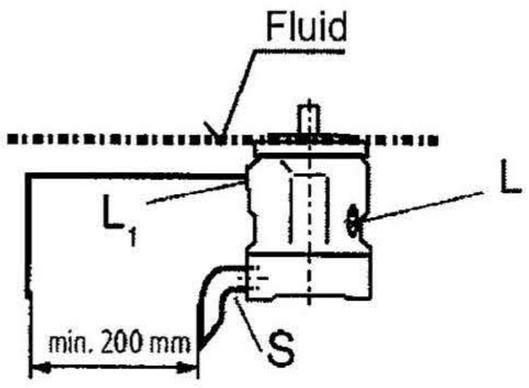

Fig. 1

1.2. Arrangement outside the reservoir
Before installation fill the pump housing, keeping it in a horizontal position. For mounting above reservoir see Fig. 2.
Limiting condition:
1.2.1. Minimum pump inlet pressure $p_{abs\,min}$ = 0.8 bar under both static and dynamic conditions.
Note: Avoid mounting above reservoir wherever possible in order to achieve a low noise level.
The permissible suction height h comes from the overall pressure loss, but may not be bigger than h_{max} = 500 mm (immersion depth $h_{t\,min}$ = 200 mm).

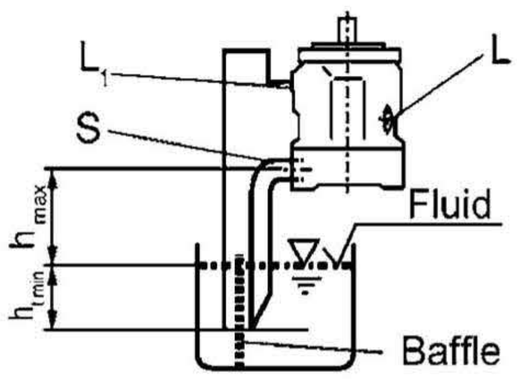

Fig. 2

Overall pressure loss

$\triangle p_{tot} = \triangle p1 + \triangle p2 + \triangle p3 \leqslant (1 - P_{abs\,min}) = 0.2$bar

$\triangle$p1: Pressure loss in pipe due to accelerating column of fluid

$\triangle p1 = \rho \cdot 1 \cdot (dv/dt)\, 10^{-5}$(bar) ρ =density(kg/m^3)
l=pipe lenght(m)

dv/dt = rate of change in fluid velocity (m/s^2)

$\triangle$p2=Pressure loss due to static head

$\triangle p2 = h \times \rho \times g \times 10^{-5}$(bar) h=height(m)
ρ =density(kg/m^3)
g = gravity = 9.81 m/s^2

$\triangle$p3: Line losses (elbows etc.)

2. Horizontal installation
The pump must be installed, so that "L" or "L_1" is at the top.

2.1. Arrangement in the reservoir
a) If the minimum fluid level is above the top of the pump, port "L_1" closed, "L" and "S" should remain open, L piped and recommendation S piped (see Fig. 3)
b) If the minimum fluid level is equal to or below the top of the pump, pipe ports "L" and possibly "S" as Fig. 4.; close port "L_1".
The conditions according to item 1.2.1.

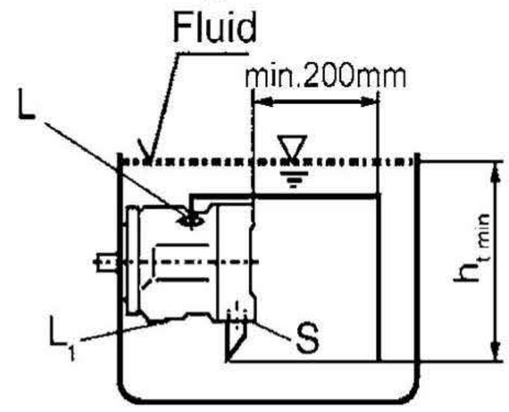

Fig. 3

2.2. Installation outside the reservoir
Fill the pump housing before commissioning.
Pipe ports "S" and the higher port "L" or "L_1".
a) When mounting above the reservoir, see Fig. 4.
Conditions according to 1.2.1.

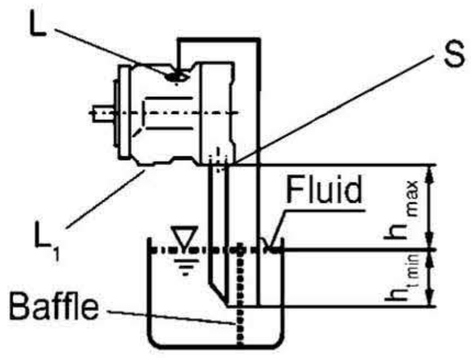

Fig. 4

b) Mounting below the reservoir
Pipe ports "L_1" and"S" according to Fig.5, close port "L".

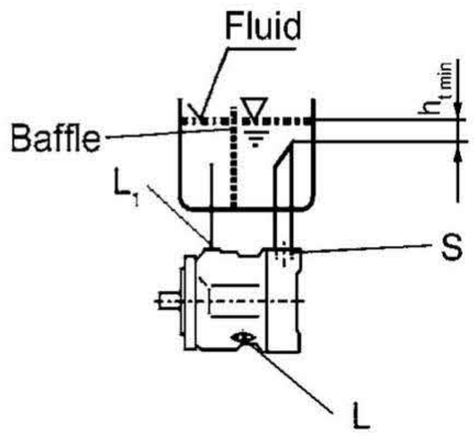

Fig. 5

七、控制方式Controller

变量特性曲线（Static characteristic）	液压原理（Circuit drawing）		
	DR 规格 Size 18...100	规格 Size 140	恒压控制： 在控制范围内使液压系统中压力维持恒压，泵仅提供系统所需流量，压力可无级设定。 The pressure controller serves to maintain a constant pressure in a hydraulic system within the controlrange of the pump.The amount of hydraulic fluid required by the system.Pressure may be steplessly set at the control valve.
	DRG 规格 Size 18...100	规格 Size 140	远程恒压控制： 恒压的功能与装置与DR相同。溢流阀接在X口作远程控制；溢流阀不在DRG控制的供货范围内。 Function and equipment as for DR. A pressure relief valve can be connected to port X for remote control applications;this is not included in the items supplied with the DRG control.
	DFR/DFR1 规格 Size 18...100	规格 Size 140	压力/流量控制： 除了恒压的功能外，借助于负载（如一节流孔）的压差可改变泵的流量。泵仅供执行机构所需流量。对DFR1，X口节流孔堵死。 Function and equipment as for in addition to the pressure control function,the pump flow may be varied by means of a differential pressure over an orifice or valvespool,installed in the service line.The pump flow is equal to the actual required flow by the actuator. The DFR1-valve has no connection between X and the tank.
	DFLR 规格 Size 28...100	规格 Size 140	压力/流量/功率控制： 为在各种工作压力下达到恒定驱动扭矩，泵的流量随之变化，从而达到流量与压力的积维持常数。 恒功率曲线之下可进行流量控制。 In order to achieve a constant drive torque with a varying operating pressure,the swivel angle and with it the output flow of the axial piston pump is varied so that the product of flow and pressure remains constant. Constant flow control is possible below the power curve.

1.规格18–140尺寸图(Size 18 to 140)

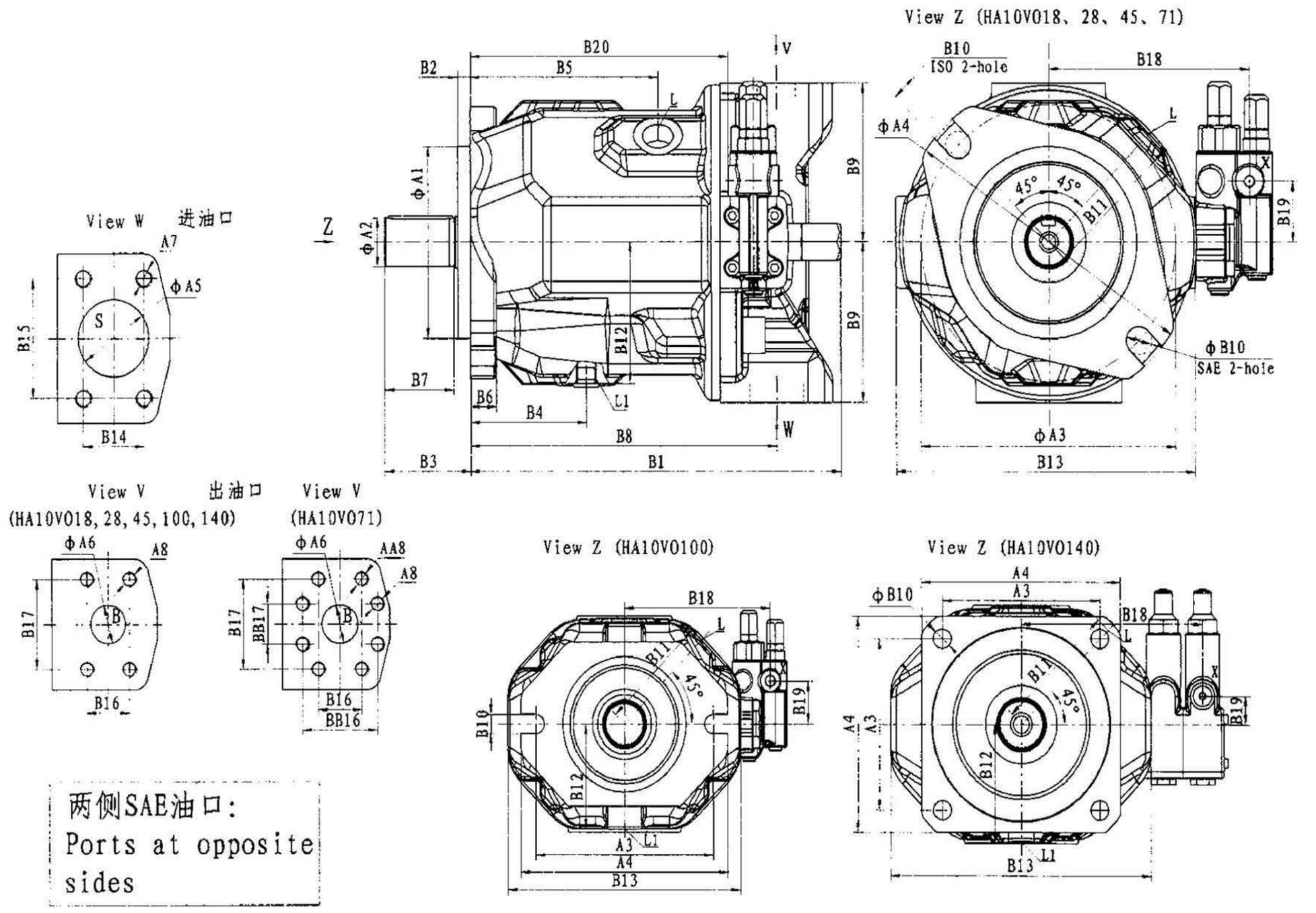

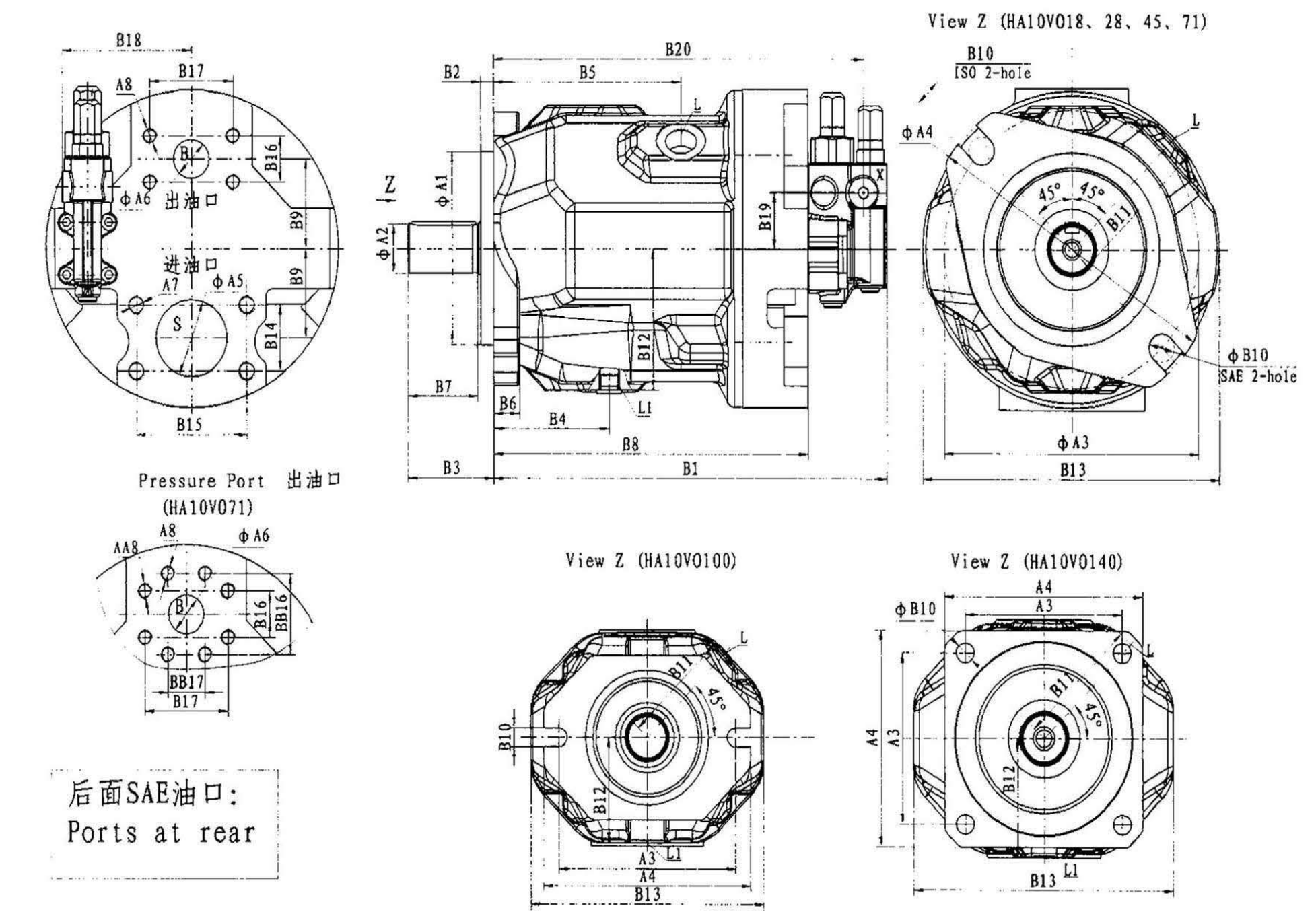

安装法兰——相关尺寸:
Dimensions-Mounting flange

排量 Size	安装法兰A(B) ISO 2(4)-hole					安装法兰C(D) SAE 2(4)-hole					A4	A5	A6
	A1	A3	B2	B10	L(L1)	A1	A3	B2	B10	L(L1)			
18	80h8	109	7	11	M16×1.5	82.55h8	106.4	6.3	11	9/16-18UNF	134	25	20
28	100h8	140	9	14	M18×1.5	101.6h8	146	9.5	Φ14	3/4-16UNF	174	32	20
45	100h8	140	9	14	M22×1.5	101.6h8	146	9.5	Φ14	7/8-14UNF	174	40	25
71	125h8	180	9	18	M22×1.5	127h8	181	12.7	Φ18	7/8-14UNF	210	50	25
100	125h8	180	9	17.5	M27×2	127h8	181	12.7	17.5	1 1/16-12UNF	210	60	32
140	180h8	158.4×158.4	9	Φ18	M27×2	152.4h8	161.6×161.6	12.7	Φ20	1 1/16-12UNF	200×200	63	32

油口型式——相关尺寸:
Dimensions-Ports for service lines

排量 Size	两侧SAE油口(Ports at opposite sides)						后面SAE油口(Ports at rear)						公制(UNC)螺纹 Metric(UNC) threads		
	B1	B8	B9	B18	B19	B20	B1	B8	B9	B18	B19	B20	A7	A8	AA8
18	195	145	63	109	40	130							M10(3/8-16UNC)	M10(3/8-16UNC)	
28	206	164	80	119	40	140	225	170	45	73	43	209	M10(7/16-14UNC)	M10(3/8-16UNC)	
45	224	184	90	129	40	155	244	189	50	81.5	40	228	M12(1/2-13UNC)	M10(3/8-16UNC)	
71	259	217	104	143	40	183	278	223	58	91.5	40	262	M12(1/2-13UNC)	M10(3/8-16UNC)	M10(7/16-14UNC)
100	329	275	100	148	40	250	344	288	55	99	40	327	M12(1/2-13UNC)	M14(1/2-13UNC)	
140	337.5	275	110	183	27	222	379	293	60	140	27	353	M12(1/2-13UNC)	M14(1/2-13UNC)	

轴端型式——相关尺寸:
Dimensions-shaft end

排量 Size	U,W轴Shaft	A2	B3	B7	P轴Shaft	A2	B3	B7	S,R轴Shaft	A2	B3	B7	k轴,Shaft	A2	B3	B7
18		Φ15.875(16/32DP;9T)	31.8	23.8		Φ18(键key6×25)	36	28		Φ19.05(16/32DP;11T)	38	30		Φ19.05(键key4.76×28.6)	41	33
28						Φ22(键key6×32)	46	36		Φ22.225(16/32DP;13T)	41	33.1		Φ22.225(键key6.35×28.6)	41.3	33.3
45		Φ22.225(16/32DP;13T)	41	33.1		Φ25(键key8×36)	52	42		Φ25.4(16/32DP;15T)	45.9	38		Φ25.4(键key6.35×34.9)	45.9	38.1
71						Φ32(键key10×45)	60	50		Φ31.75(12/24DP;14T)	55.4	47.5		Φ31.75(键key7.94×41.3)	55.4	47.5
100		Φ31.75(12/24DP;14T)	55.4	47.5		Φ40(键key12×68)	80	70		Φ38.1(12/24DP;17T)	61.9	54		Φ38.1(键key9.52×52.1)	61.9	54
140						Φ45(键key14×80)	92	82		Φ44.45(8/16 DP;13T)	75	67		Φ44.45(键key11.11×65)	75	67

通用尺寸:
Dimensions

排量 Size	B4	B5	B6	B11	B12	B13	B14	B15	B16	B17	BB16	BB17	X	B	S
18	43	83	11.5	67	66	152	26.2	52.4	22.2	47.6			7/16-20UNF	3/4″	1″
28	40	90	13	74	75	164	30.2	58.7	22.2	47.6			7/16-20UNF	3/4″	1 1/4″
45	45	96	13	83	81	184	35.7	69.9	26.2	52.4			7/16-20UNF	1″	1 1/2″
71	53	115	17	98	92	210	42.9	77.8	30.2	58.7	52.4	26.2	7/16-20UNF	1″	2″
100	95	175	20	106	95	236	50.8	88.9	31.8	66.7			7/16-20UNF	1 1/4″	2 1/2″
140	78	173	21	118.5	108	262	50.8	88.9	31.8	66.7			M14×1.5	1 1/4″	2 1/2″

2.规格18尺寸(Unit dimensions,size 18)

ISO法兰Flange ISO

P 轴 Shaft P (HA10VSO 18 XXX/31X-PPA12N00)

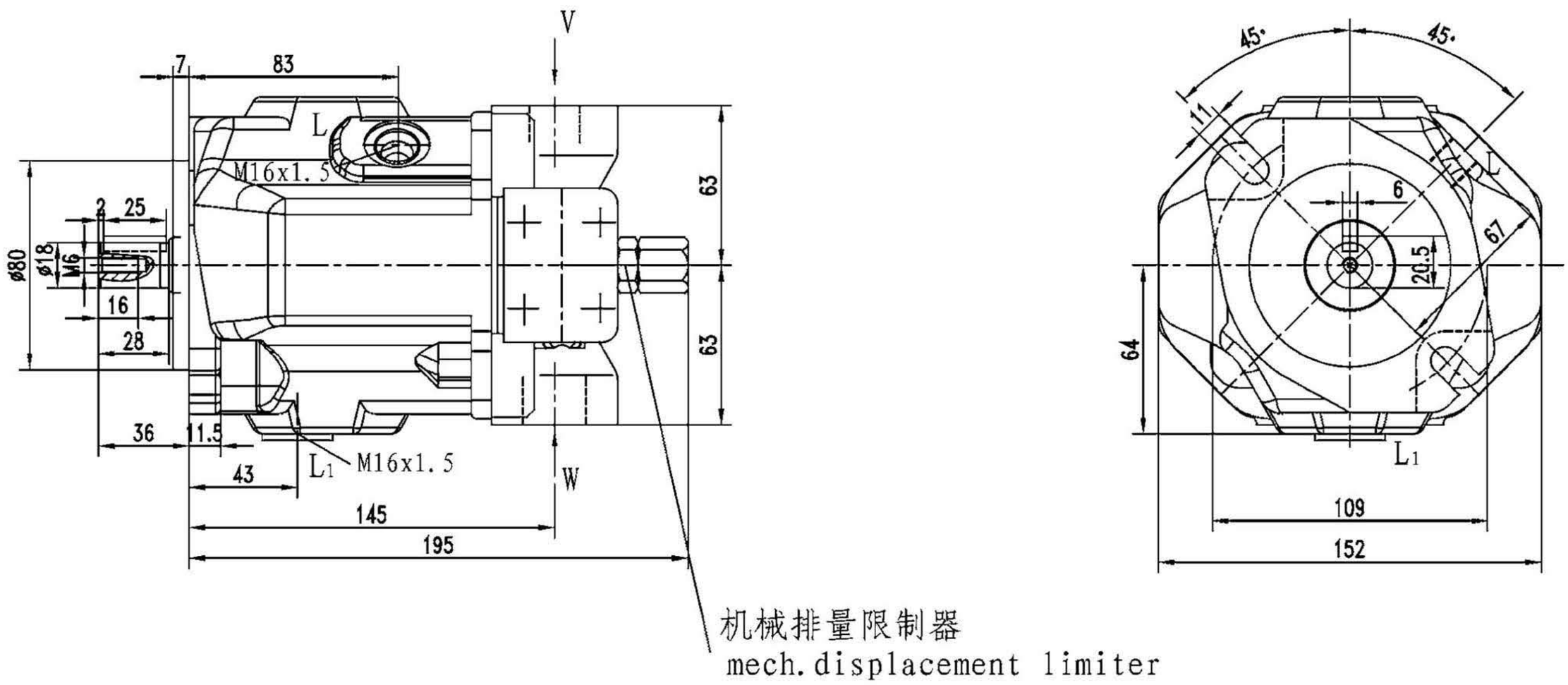

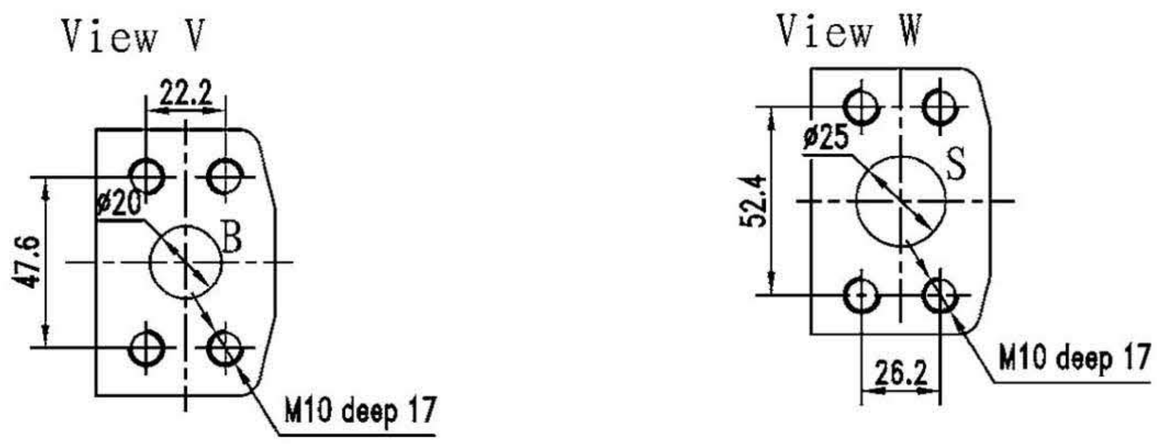

SAE法兰 Flange SAE

K轴 Shaft K (A10VSO 18 XXX/31X-PKC62N00)

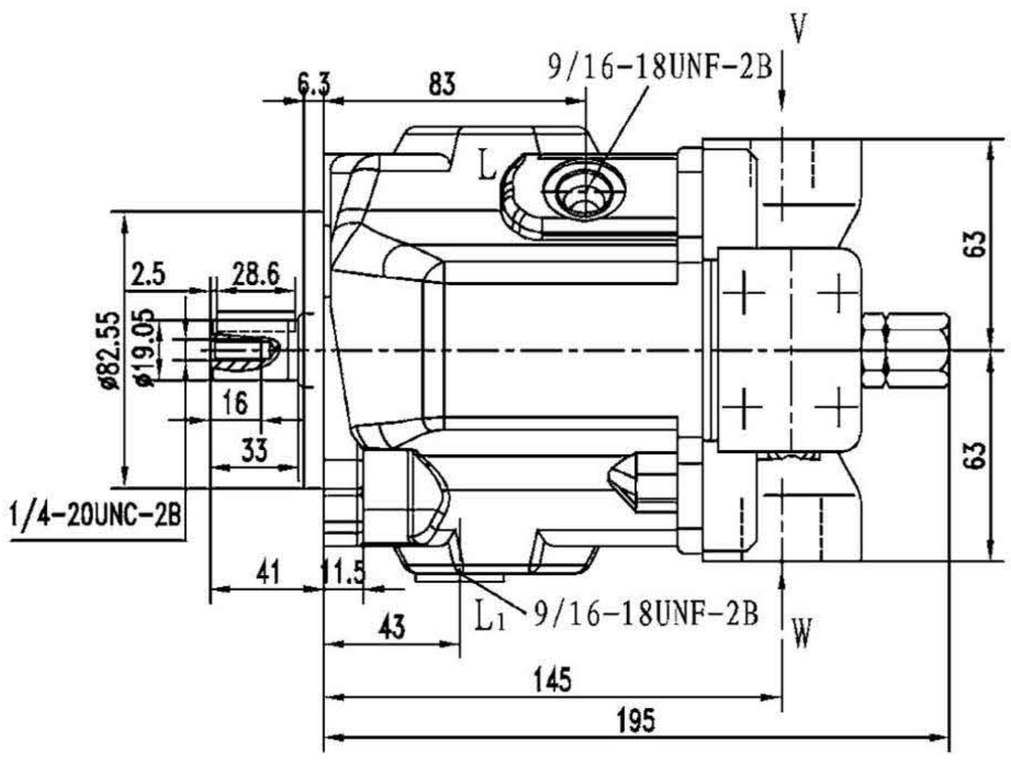

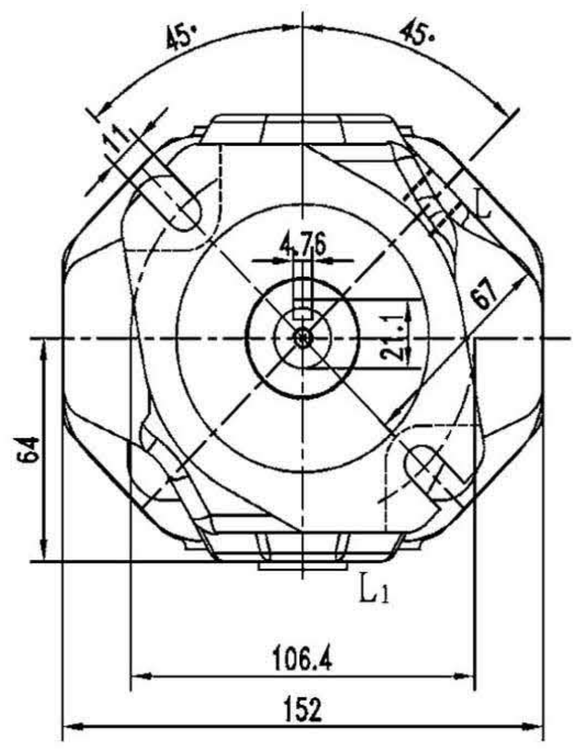

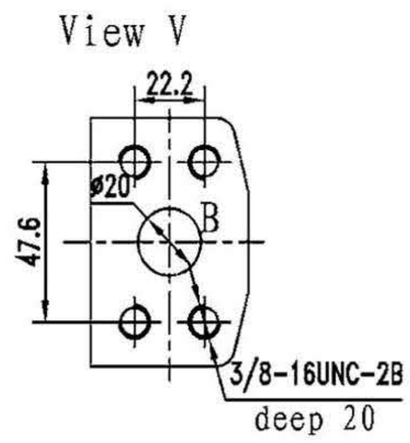

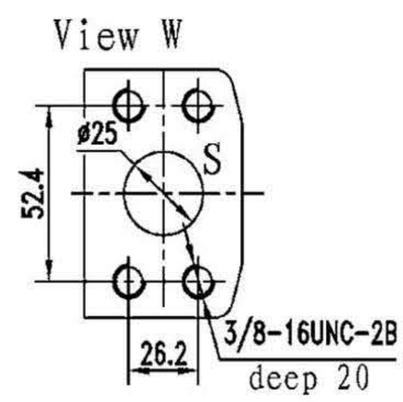

U轴 Shaft U

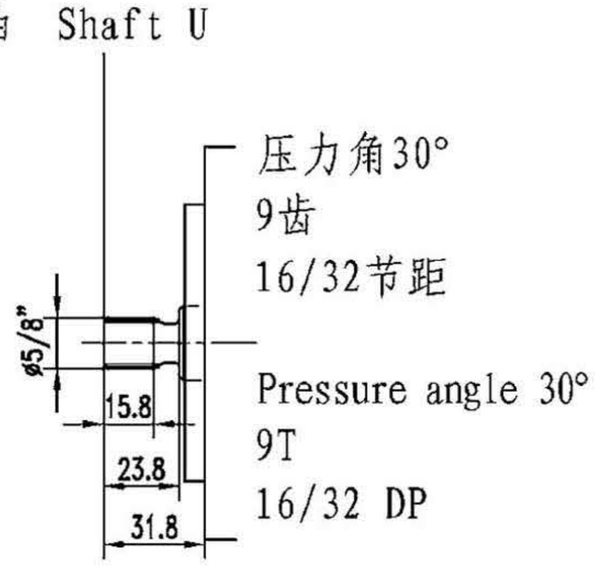

S轴 Shaft S

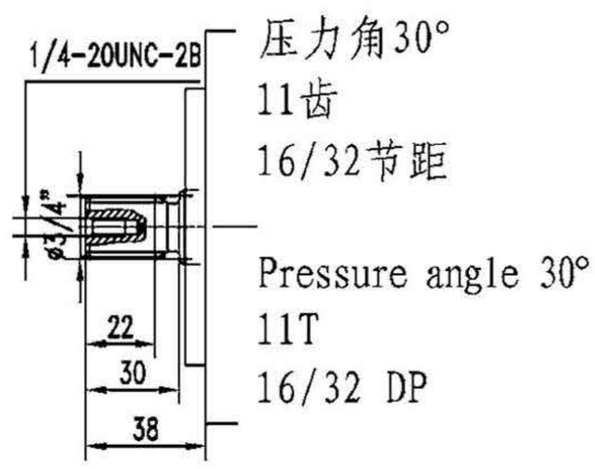

R轴 Shaft R

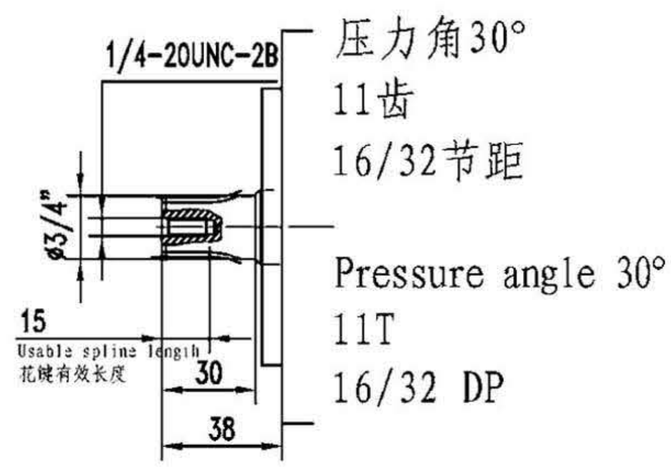

3.规格28尺寸(Unit dimensions,size 28)

ISO法兰Flange ISO

P 轴 Shaft P (A10VSO 28 XXX/31X-PPA12N00)

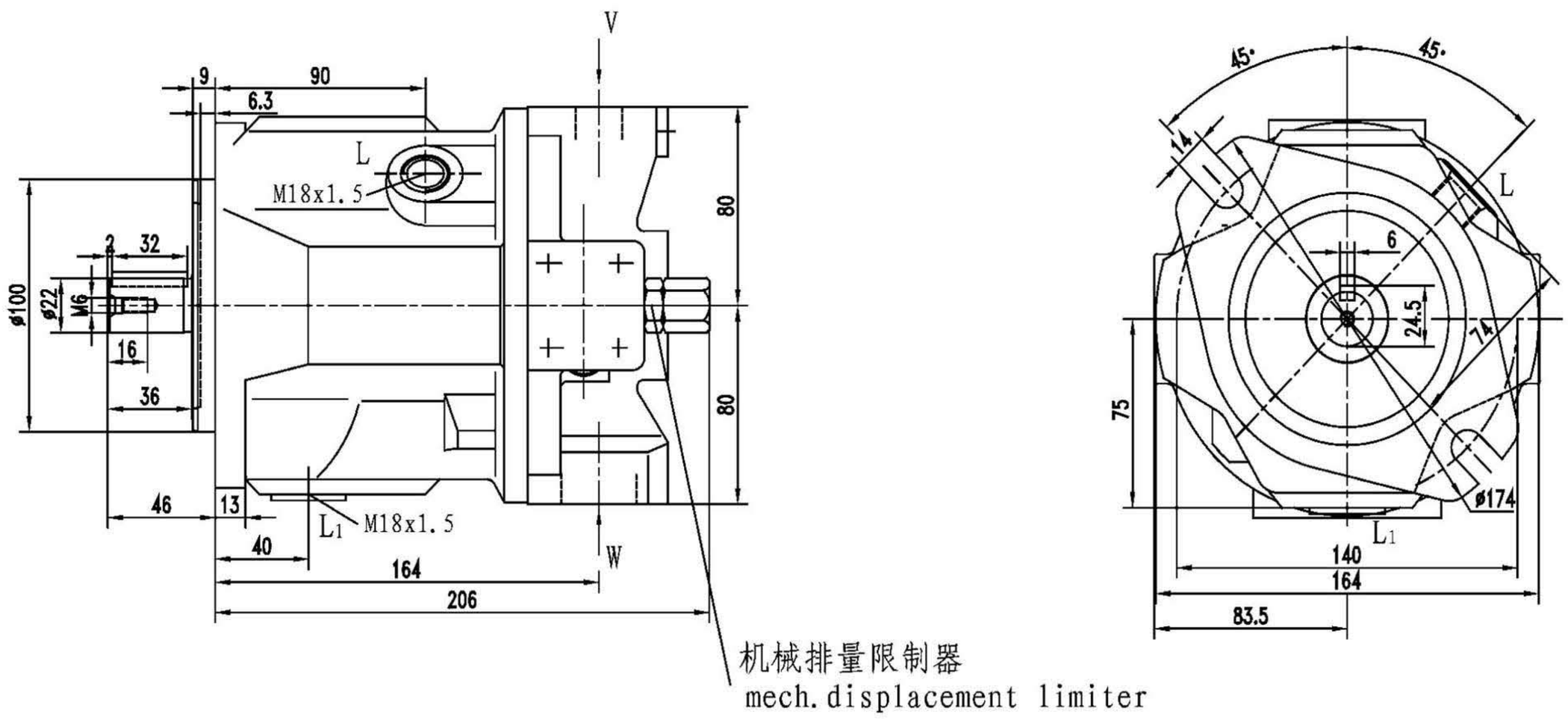

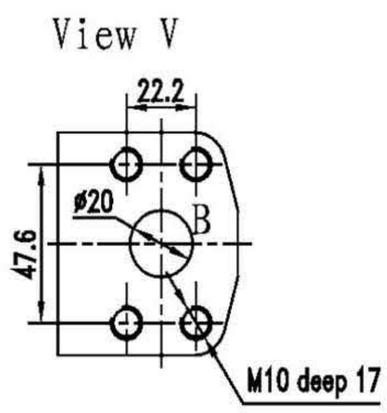

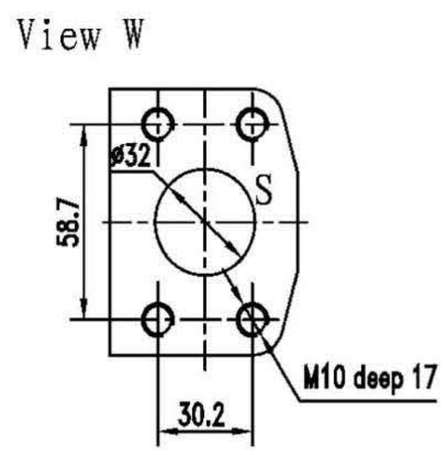

SAE法兰　Flange SAE

K轴 Shaft　K　(A10VSO 28 XXX/31X-PKC62N00)

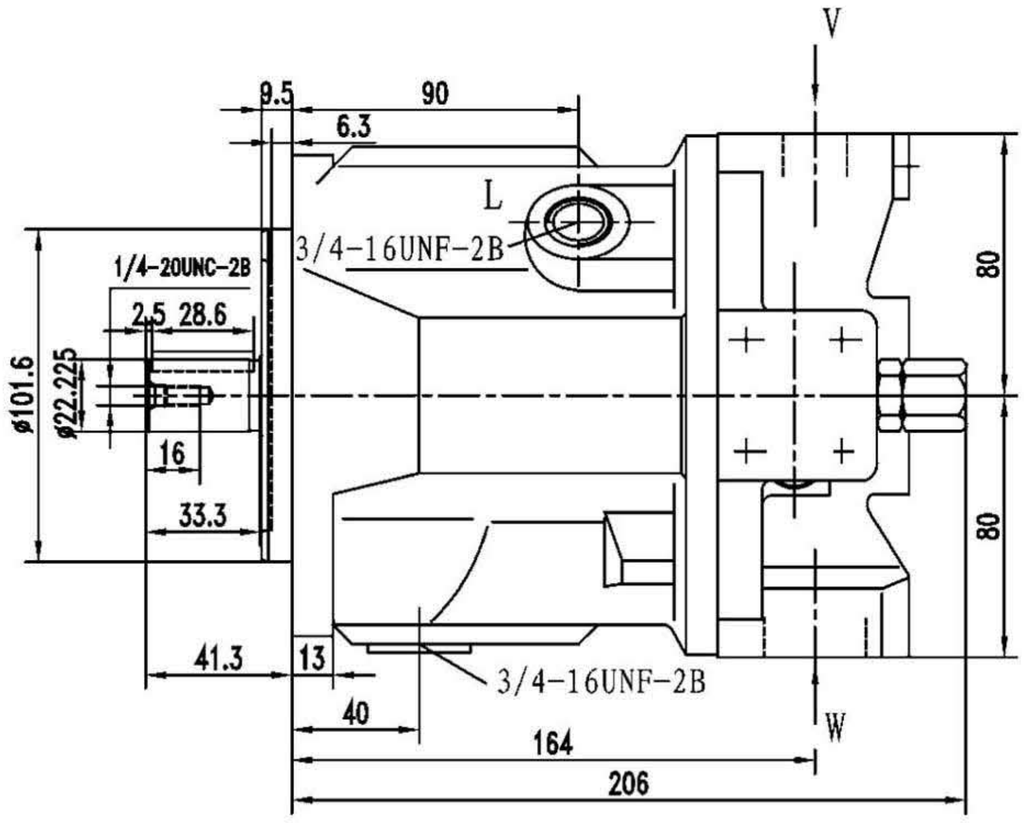

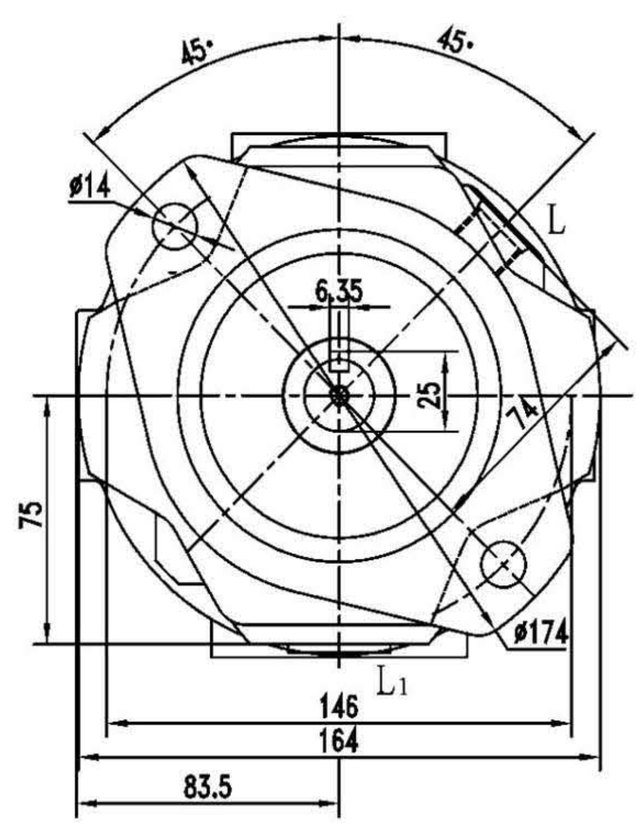

View V

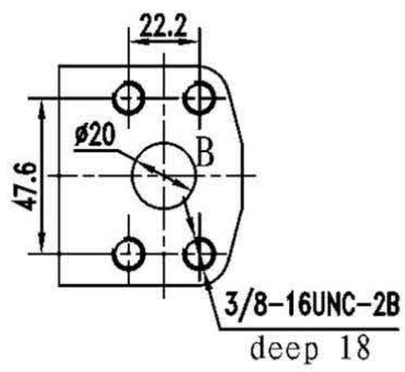

View W

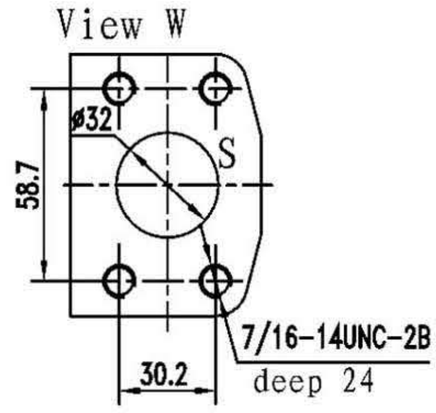

S轴　Shaft S

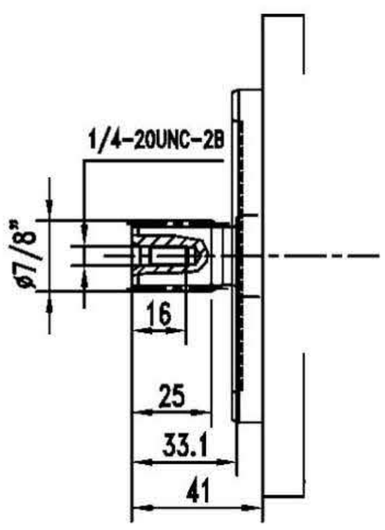

压力角30°
13齿
16/32节距

Pressure angle 30°
13T
16/32 DP

R轴　Shaft R

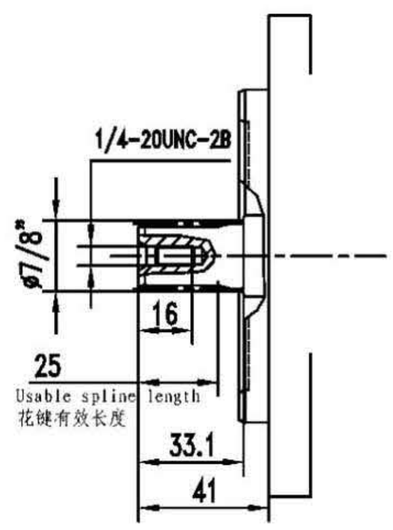

压力角30°
13齿
16/32节距

Pressure angle 30°
13T
16/32 DP

4.规格45尺寸(Unit dimensions,size 45)

ISO法兰Flange ISO

P 轴 Shaft P (A10VSO 45 XXX/31X-PPA12N00)

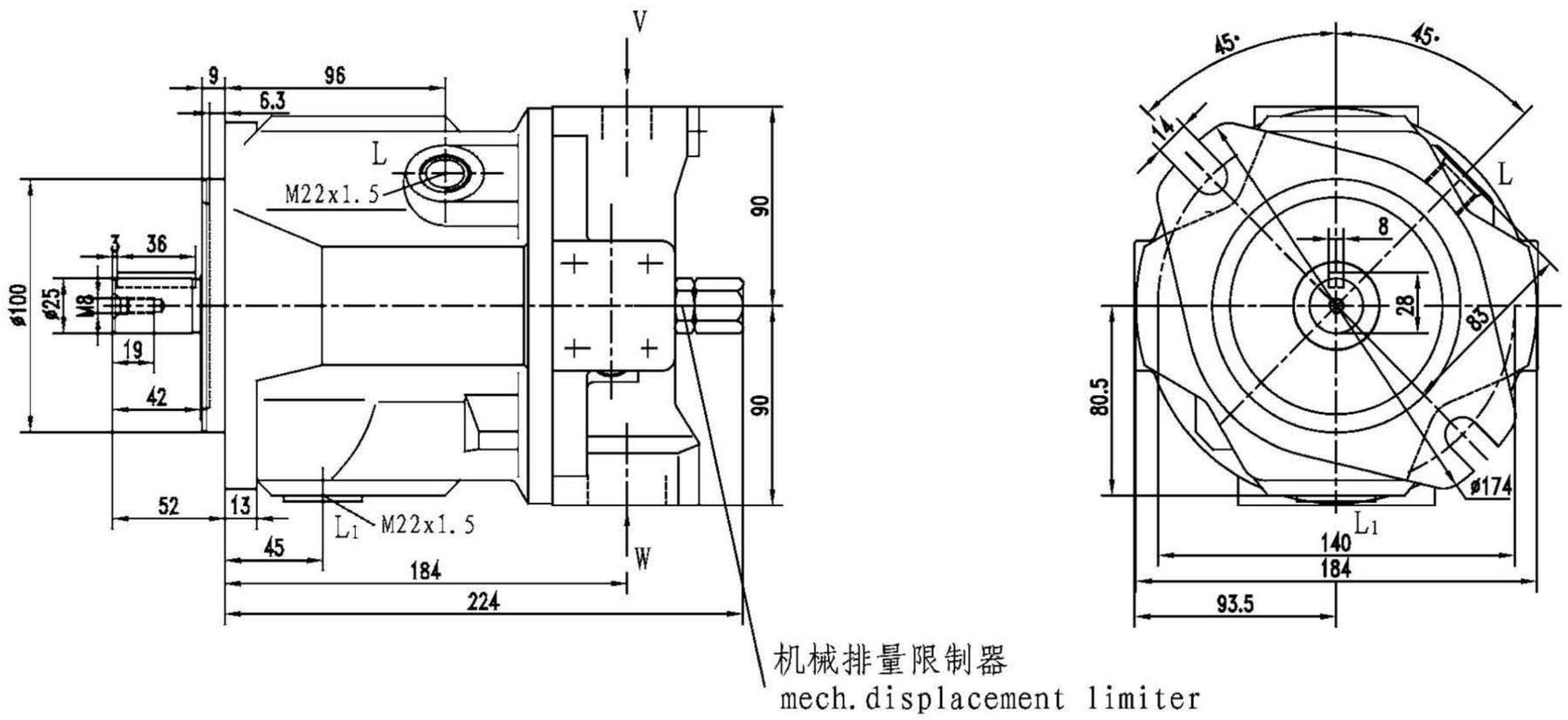

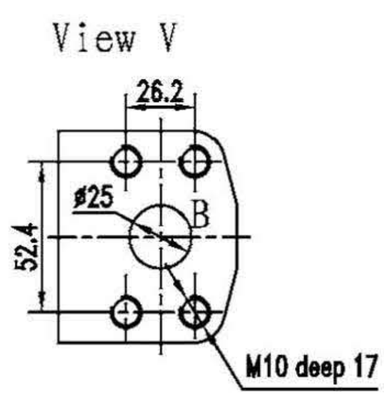

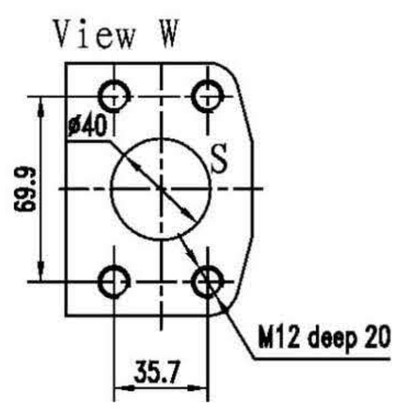

SAE法兰　Flange SAE

K轴 Shaft K (A10VSO 45 XXX/31X-PKC62N00)

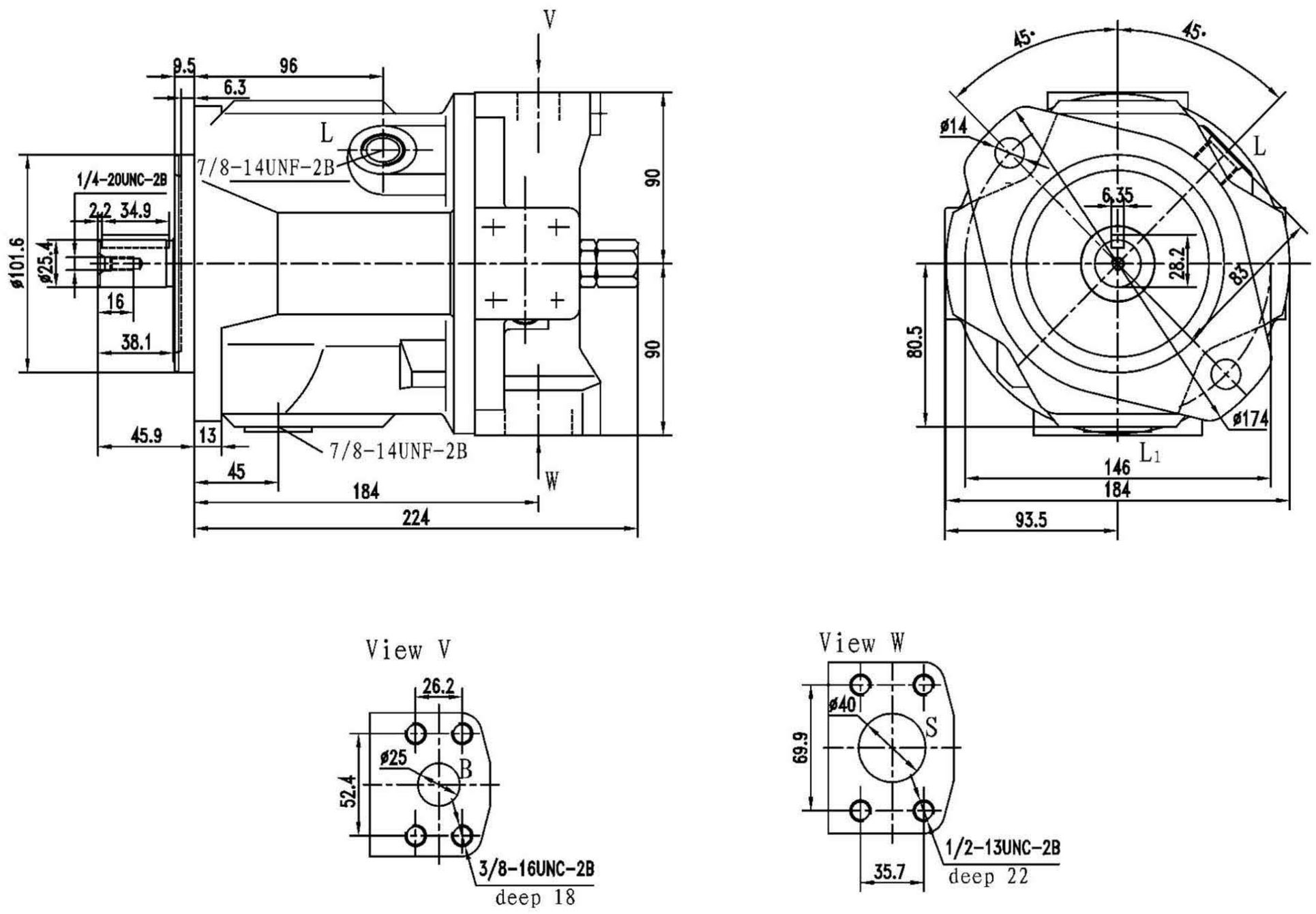

U轴　Shaft U

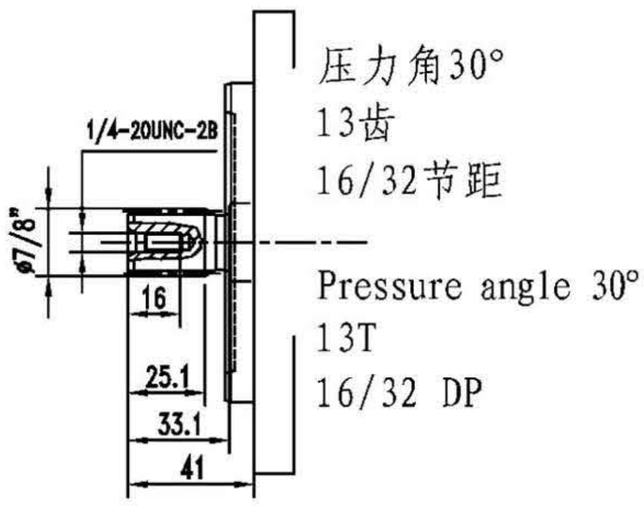

压力角30°
13齿
16/32节距

Pressure angle 30°
13T
16/32 DP

S轴　Shaft S

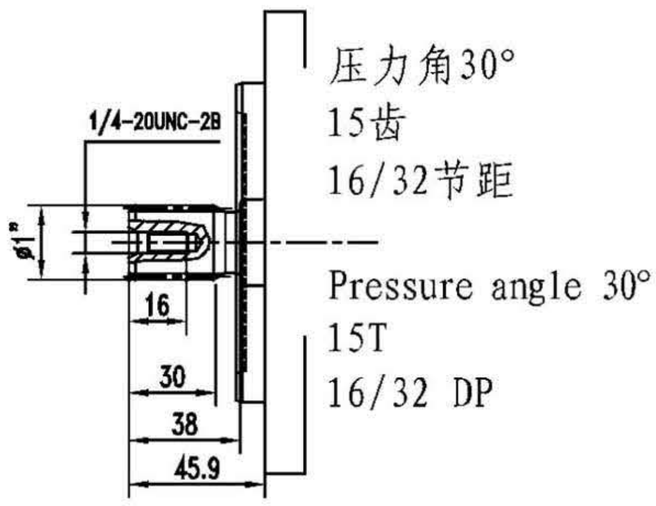

压力角30°
15齿
16/32节距

Pressure angle 30°
15T
16/32 DP

R轴　Shaft R

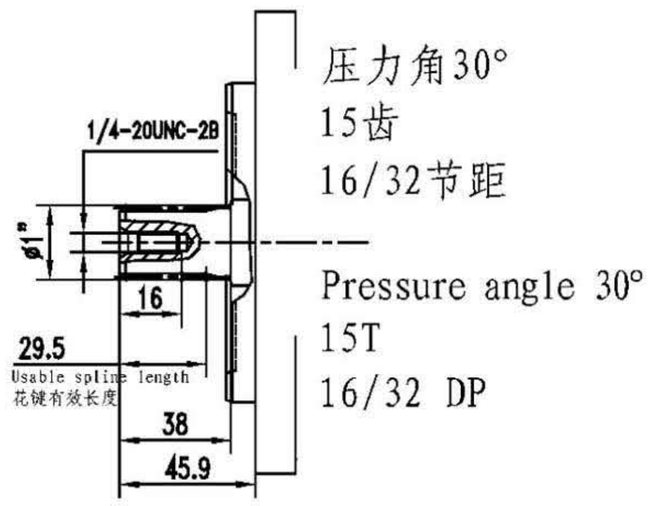

压力角30°
15齿
16/32节距

Pressure angle 30°
15T
16/32 DP

5.规格71尺寸(Unit dimensions,size 71)

ISO法兰Flange ISO

P 轴 Shaft P (A10VSO 71 XXX/31X-PPA12N00)

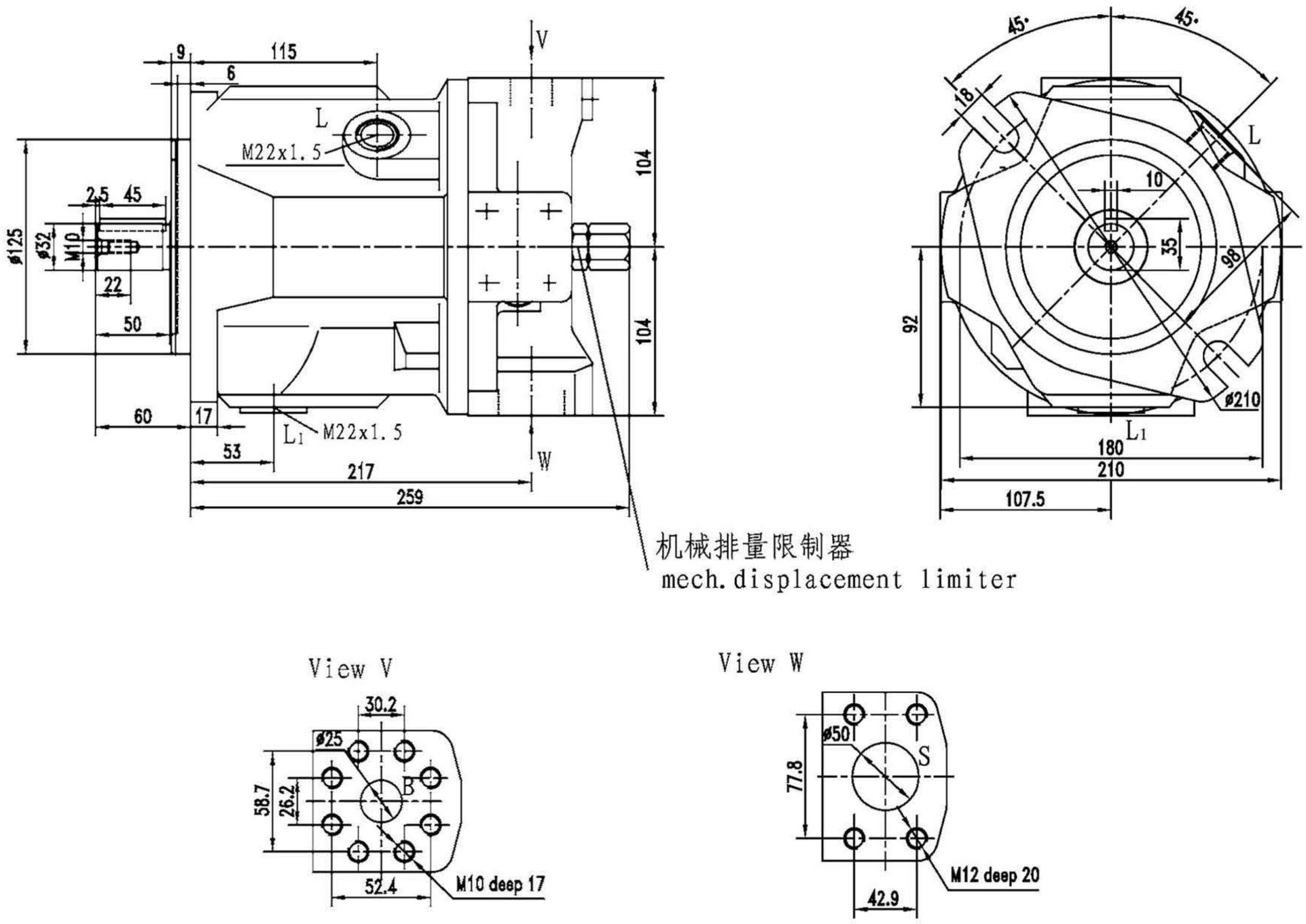

SAE法兰　Flange SAE

K轴 Shaft K (A10VSO 71 XXX/31X-PKC62N00)

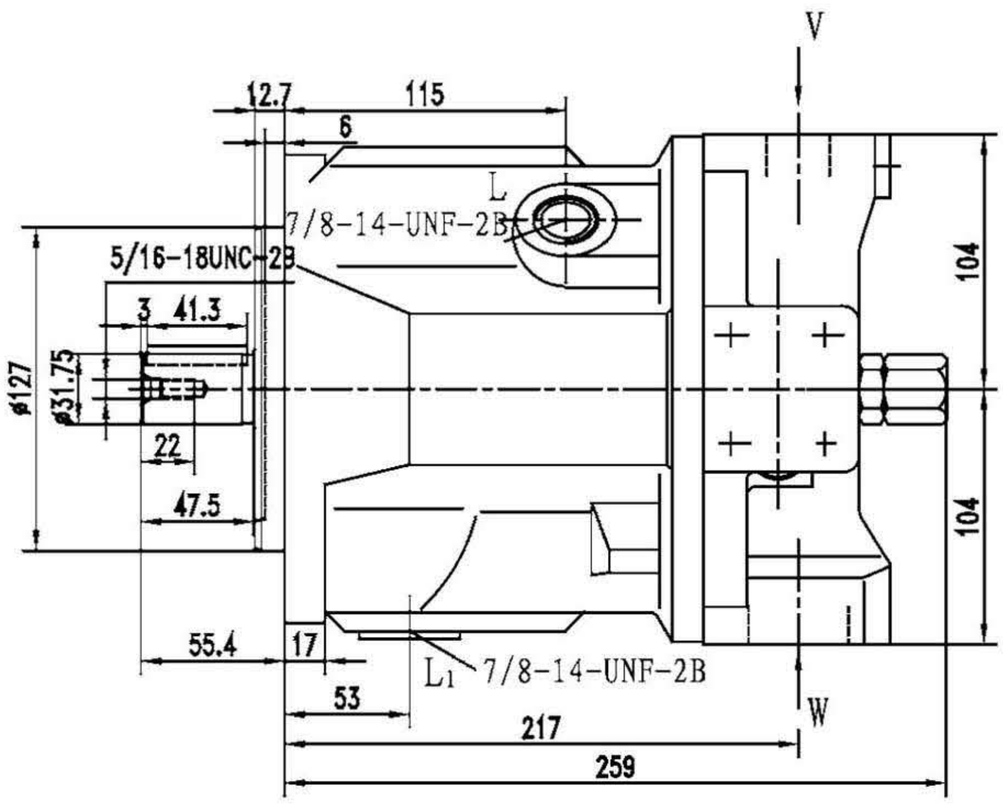

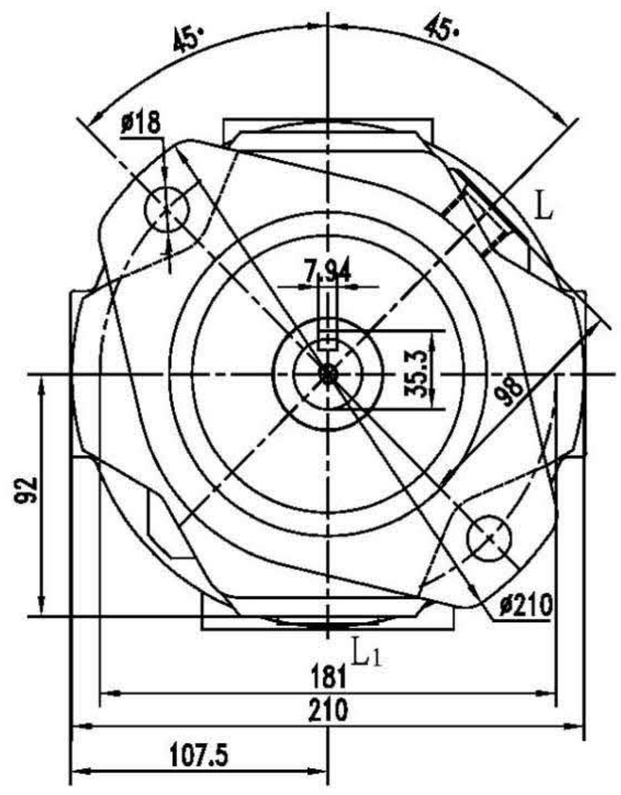

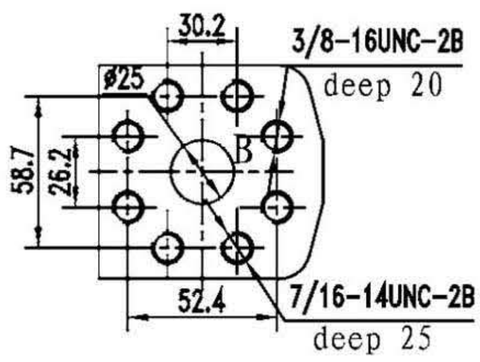

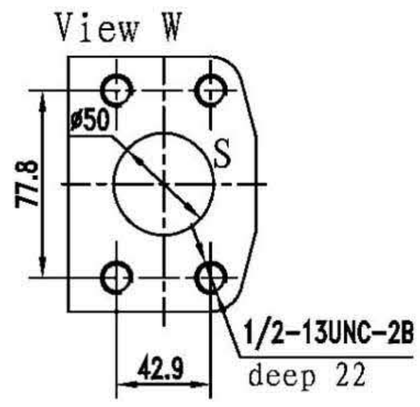

S轴 Shaft S

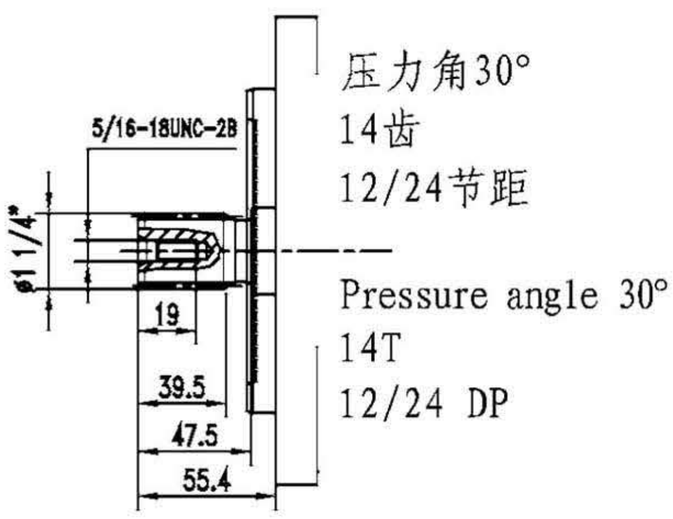

R轴 Shaft R

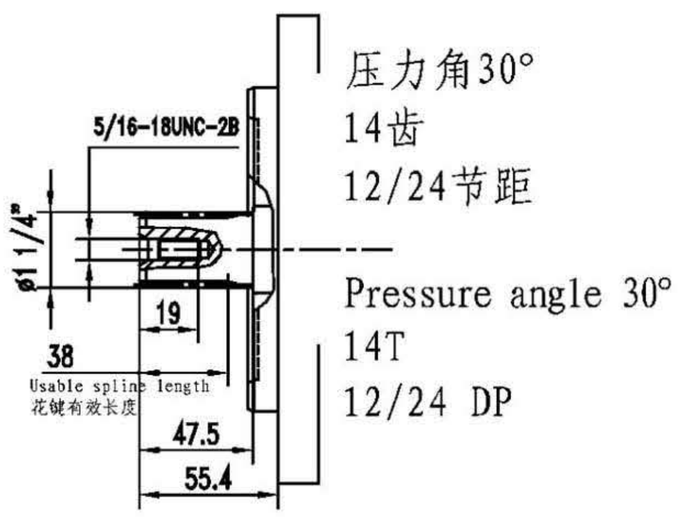

6.规格100尺寸(Unit dimensions,size 100)

ISO法兰Flange ISO

P 轴 Shaft P (A10VSO 100 XXX/31X-PPA12N00)

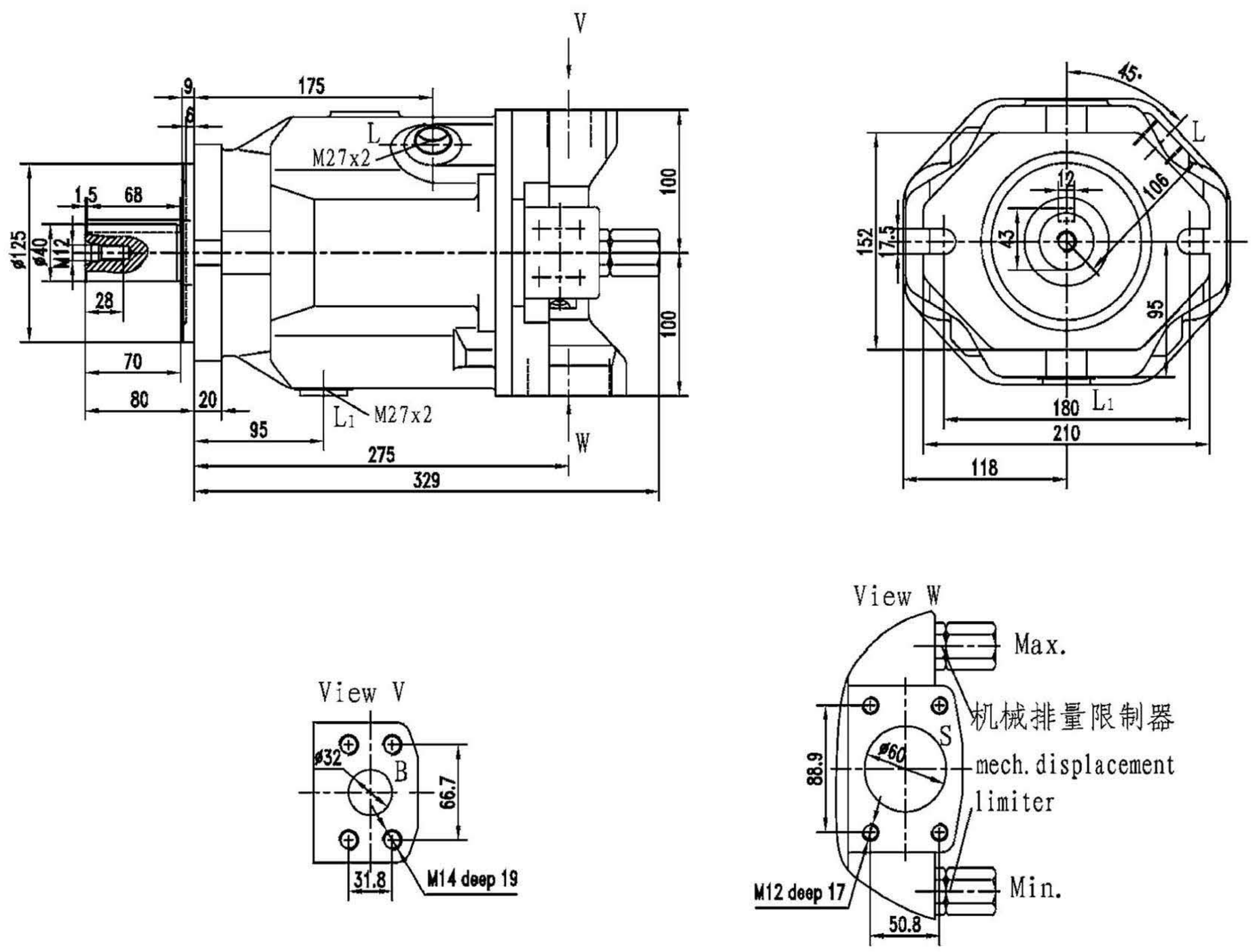

SAE法兰Flange SAE

K 轴 Shaft K (A10VSO 100 XXX/31X-PKC62N00)

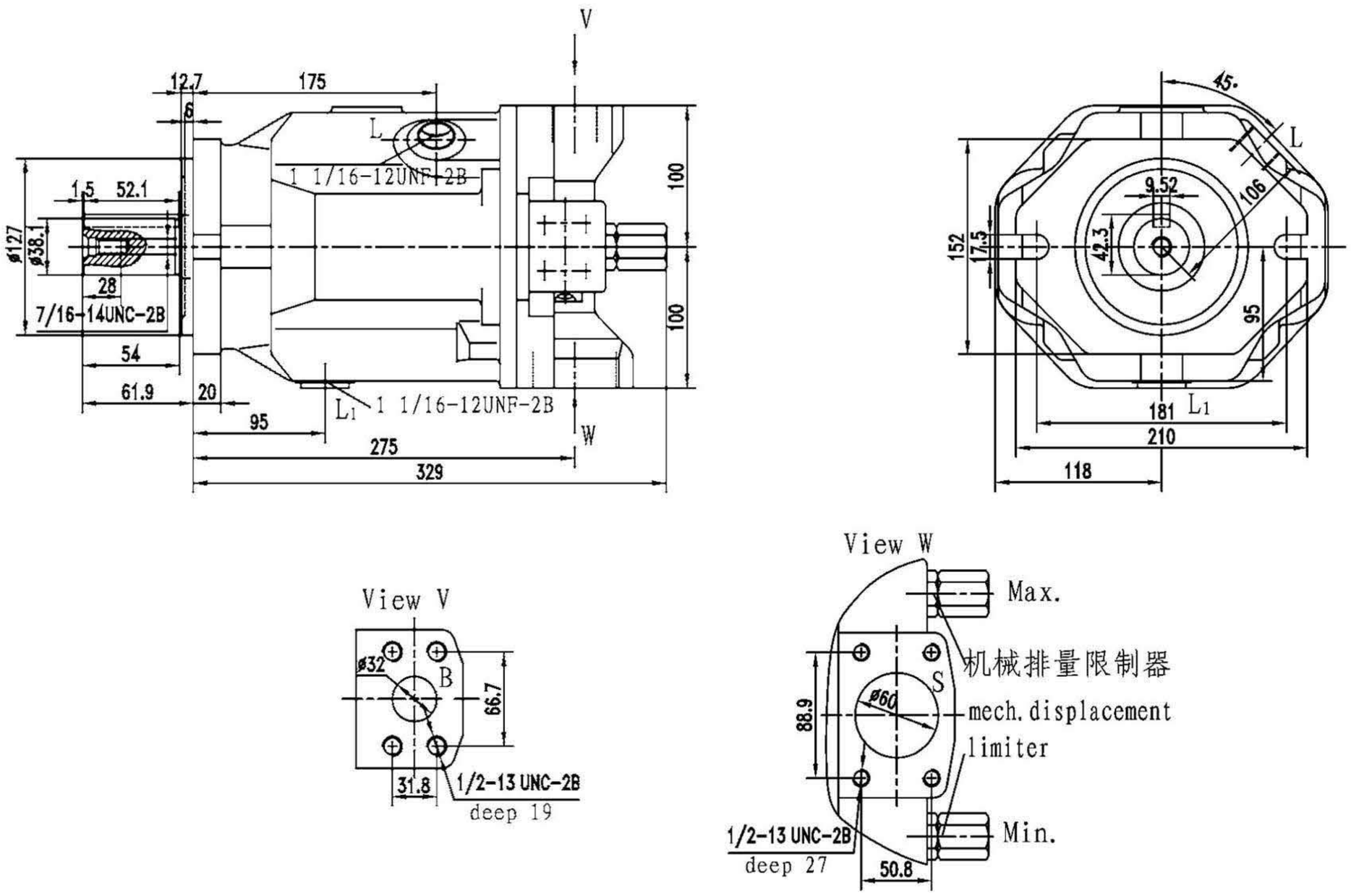

S轴 Shaft S

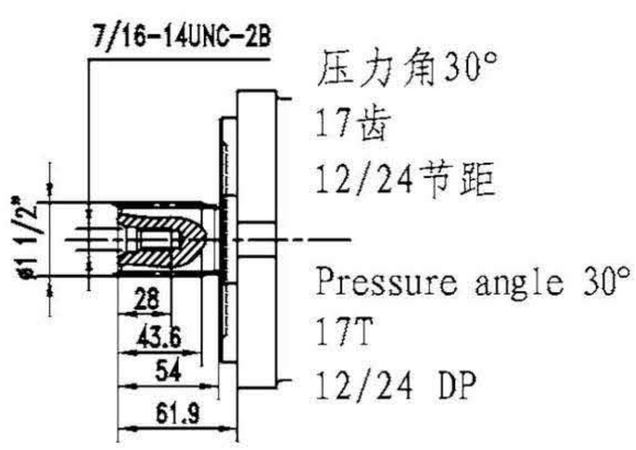

U轴 Shaft U

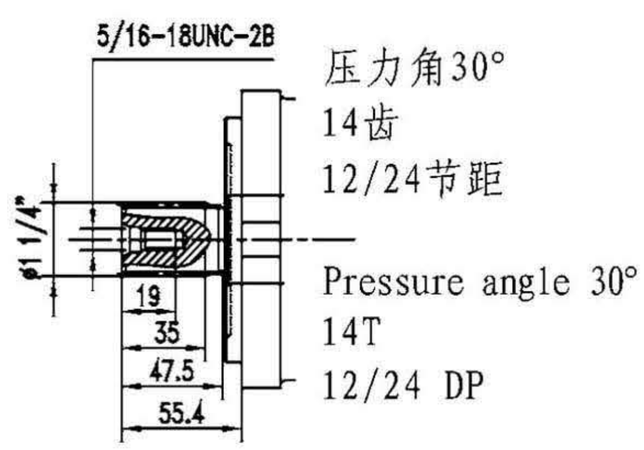

W轴 Shaft W

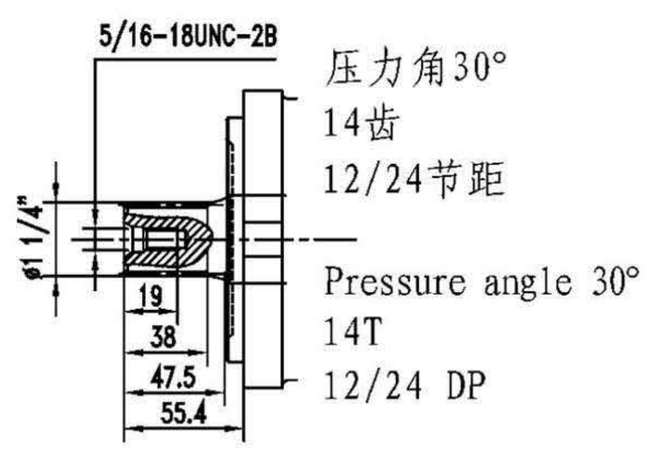

7.规格140尺寸(Unit dimensions,size 140)

ISO法兰Flange ISO

P 轴 Shaft P (A10VSO 140 XXX/31X-PPB12N00)

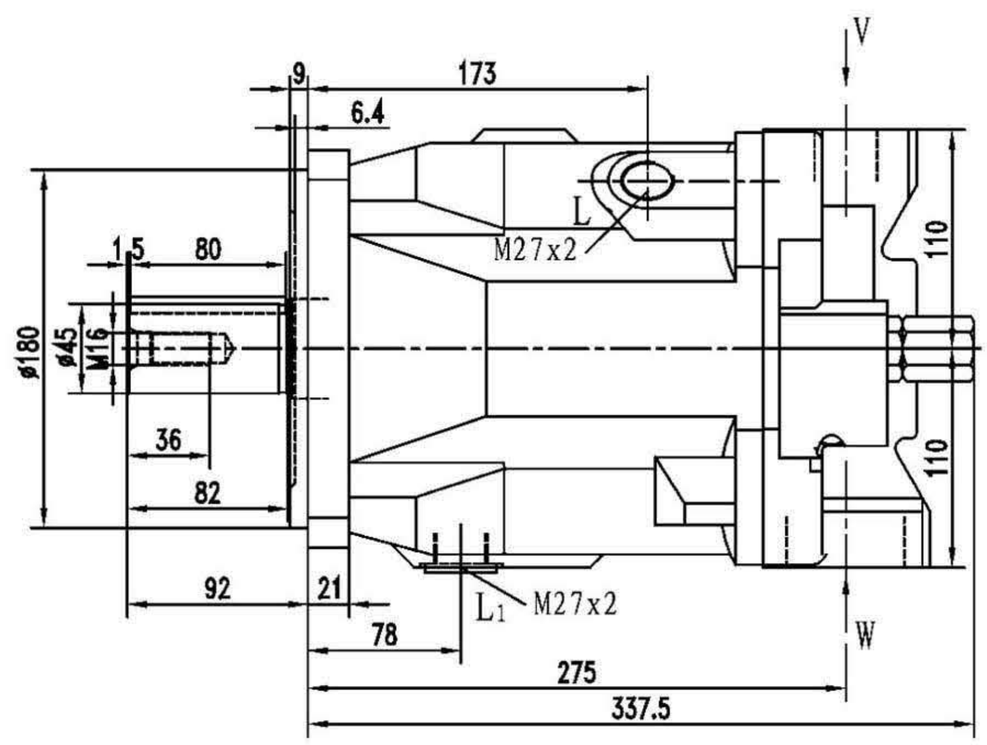

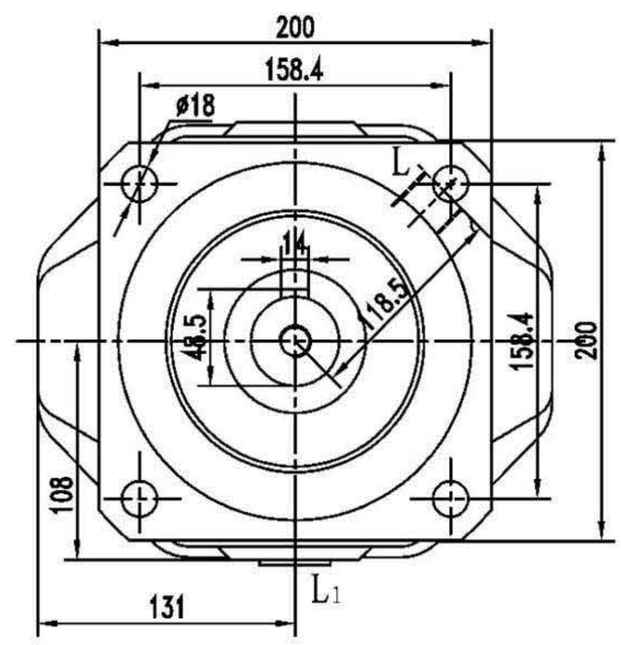

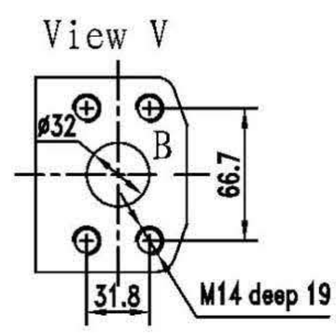

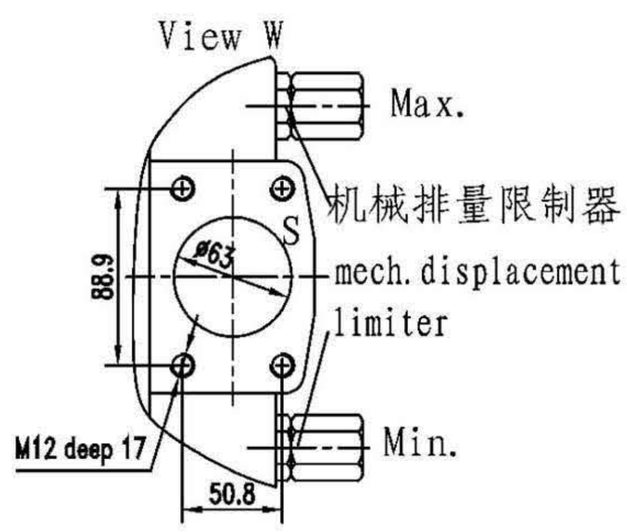

SAE法兰Flange SAE

K 轴 Shaft K (A10VSO 140 XXX/31X-PKD62N00)

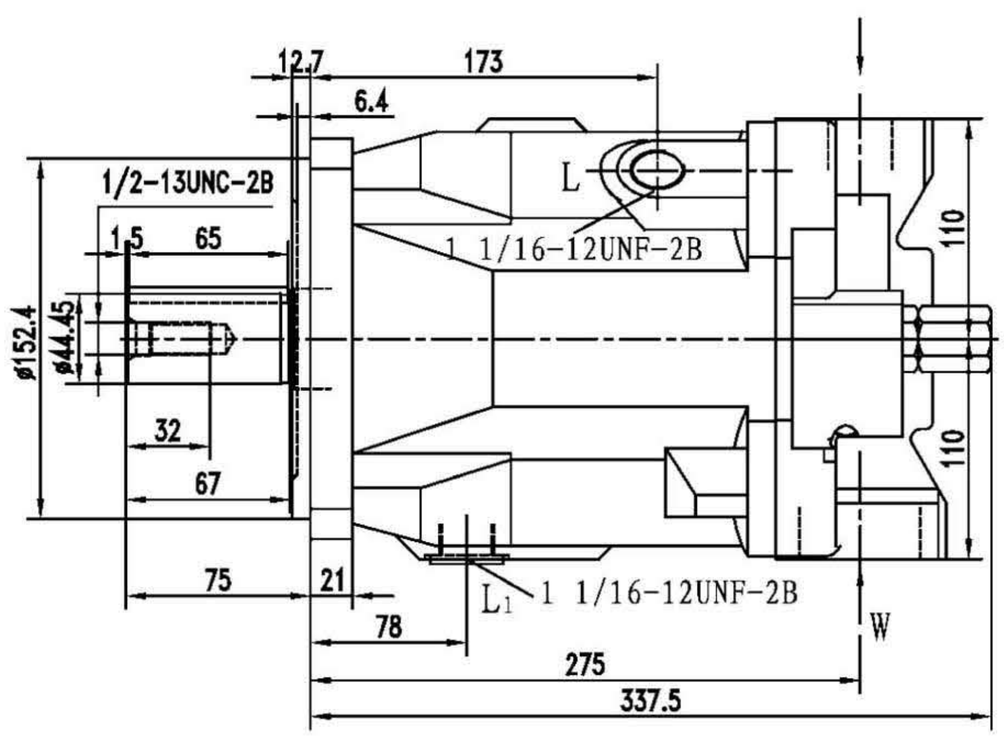

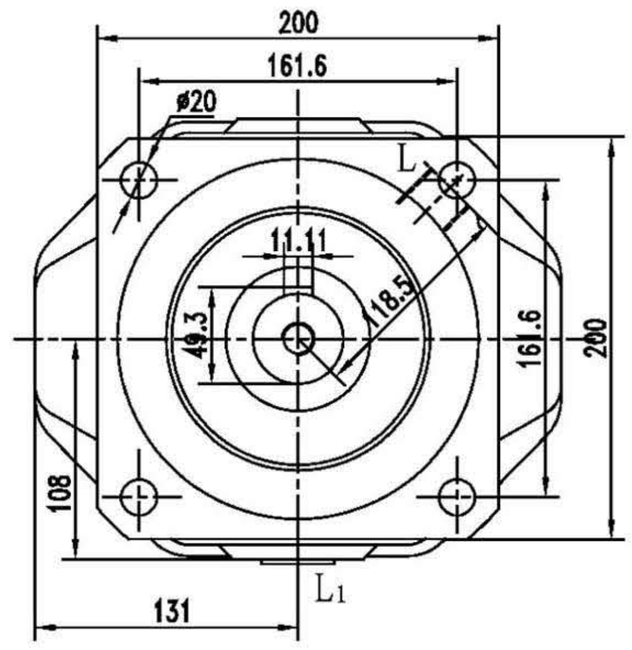

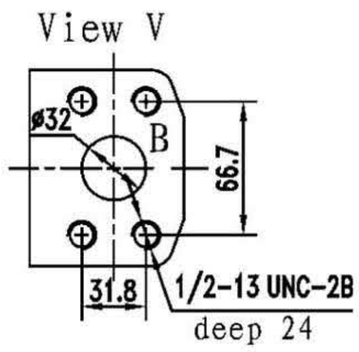

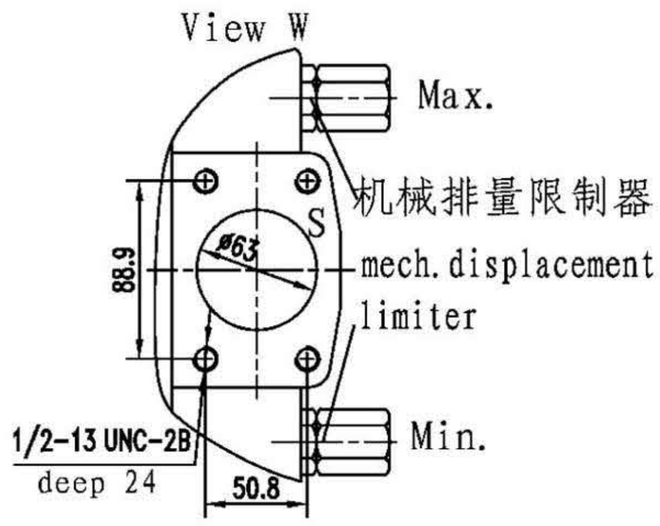

S轴 Shaft S

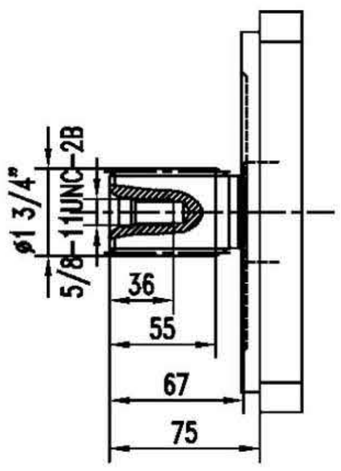

压力角30°
13齿
8/16节距

Pressure angle 30°
13T
8/16 DP

九、通 轴Through drive

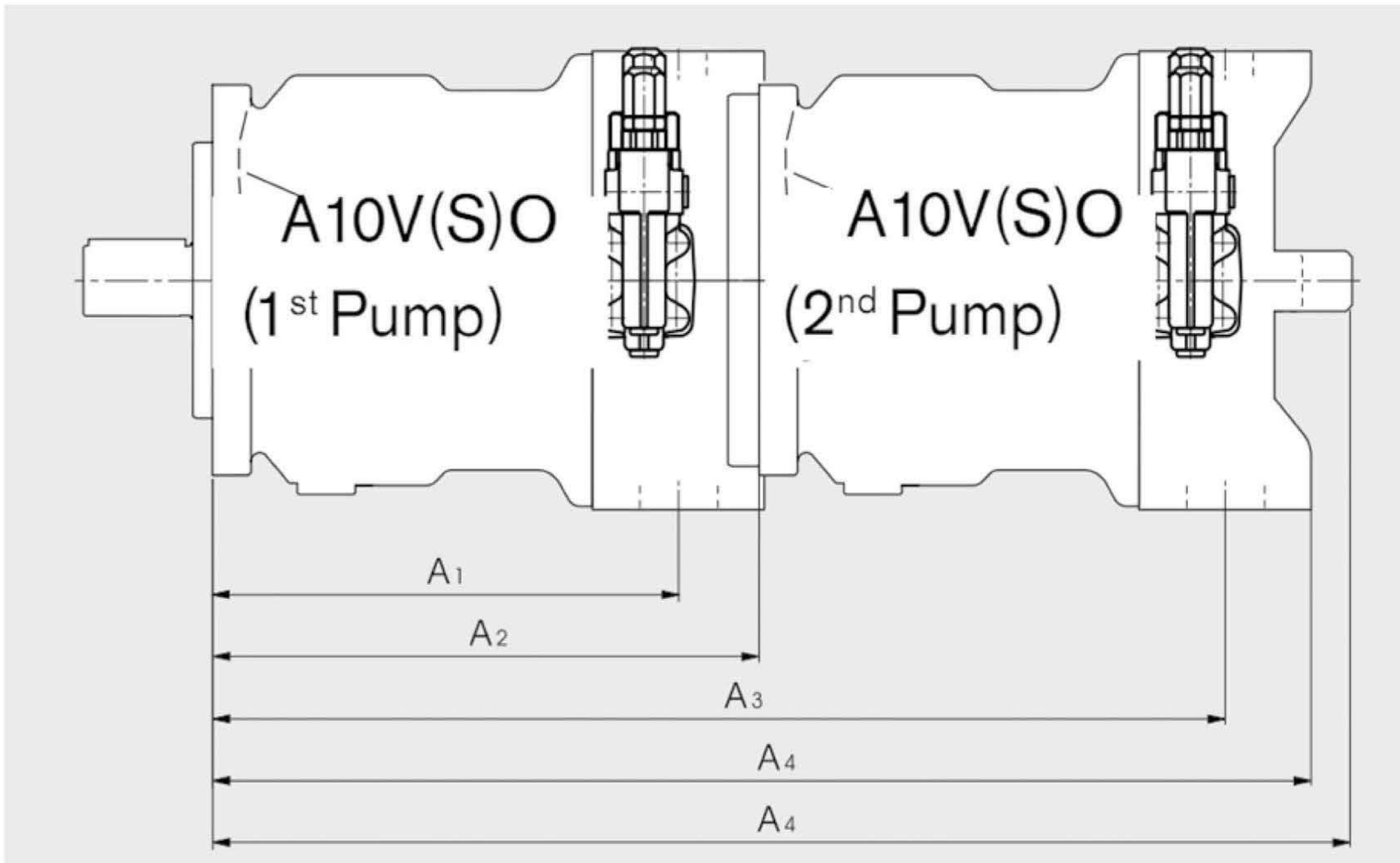

A10V(S)O (1.Pump)

	A10VSO18 A1 A2 A3 A4	A10VSO28 A1 A2 A3 A4	A10VSO45 A1 A2 A3 A4	A10VSO71 A1 A2 A3 A4	A10VSO100 A1 A2 A3 A4	A10VSO140 A1 A2 A3 A4
A10VSO18	5.71 7.17 12.87 14.84 (145)(182)(327)(377)	6.50 8.30 13.74 15.71 (165)(204)(349)(399)	7.24 9.02 14.72 16.69 (184)(229)(374)(424)	8.54 10.51 16.22 18.19 (217)(267)(412)(462)	1083 13.31 19.02 20.98 (275)(338)(483)(533)	10.83 13.78 19.49 21.46 (275)(350)(495)(545)
A10VSO28	– – – –	6.50 8.03 14.53 15.67 (165)(204)(369)(398)	7.24 9.02 15.51 16.65 (184)(229)(394)(423)	8.54 10.51 17.01 18.15 (217)(267)(432)(461)	10.83 13.31 19.80 20.94 (275)(338)(503)(532)	10.83 13.78 20.28 21.42 (275)(350)(515)(544)
A10VSO45	– – – –	– – – –	7.24 9.02 16.30 17.64 (184)(229)(413)(448)	8.54 10.51 17.76 19.36 (217)(267)(415)(486)	10.83 13.31 20.55 21.93 (275)(338)(522)(557)	10.83 13.78 21.02 22.40 (275)(350)(534)(569)
A10VSO71	– – – –	– – – –	– – – –	8.54 10.51 19.06 20.63 (217)(267)(484)(524)	10.83 13.31 21.85 23.43 (275)(338)(555)(595)	10.83 13.78 22.32 23.90 (275)(350)(567)(607)
A10VSO100	– – – –	– – – –	– – – –	– – – –	10.83 13.31 24.13 25.79 (275)(338)(613)(655)	10.83 13.78 24.61 26.26 (275)(350)(625)(667)
A10VSO140	– – – –	– – – –	– – – –	– – – –	– – – –	10.83 13.78 24.61 26.26 (275)(350)(625)(667)

1. 如果两台泵需要组装供货，则两个订货型号要用“+”号连接起来。

If a second pump must be factory mounted,the two individual model codes must be combined with a “+”.

Model code pump 1+ model code pump 2.

订货示例 Ordering example :

A10VO100DR/31R-PSC12K07 + A10VO71DR/31R-PSC12N00

通轴KB2元件尺寸 Unit Dimensions Through Drives KB2

法兰ISO 80，2孔，用于添加A10VSO10(花键轴S，A型安装法兰)或A10VSO18(花键轴S或R，A型安装法兰)。

Flange ISO 80, 2-hole for built-on A10VSO 10 (splined shaft S, mounting flange A) or A10VSO 18 (splined shaft S or R, mounting flange A)

订货型号Order code KB2

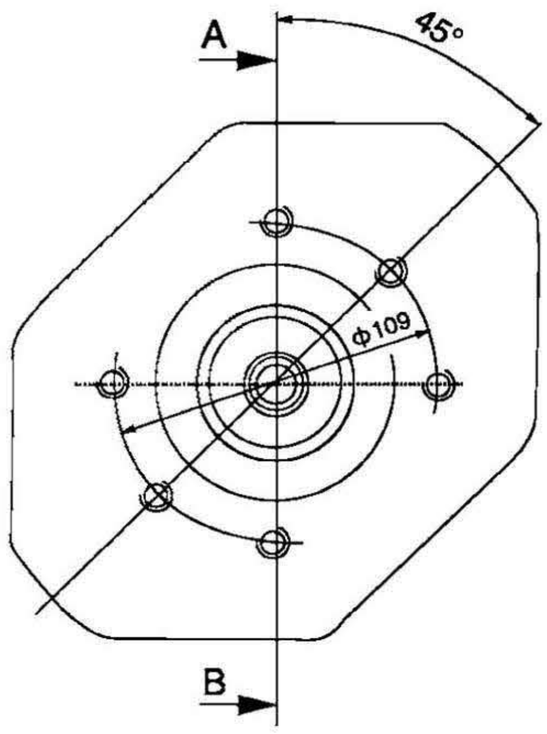

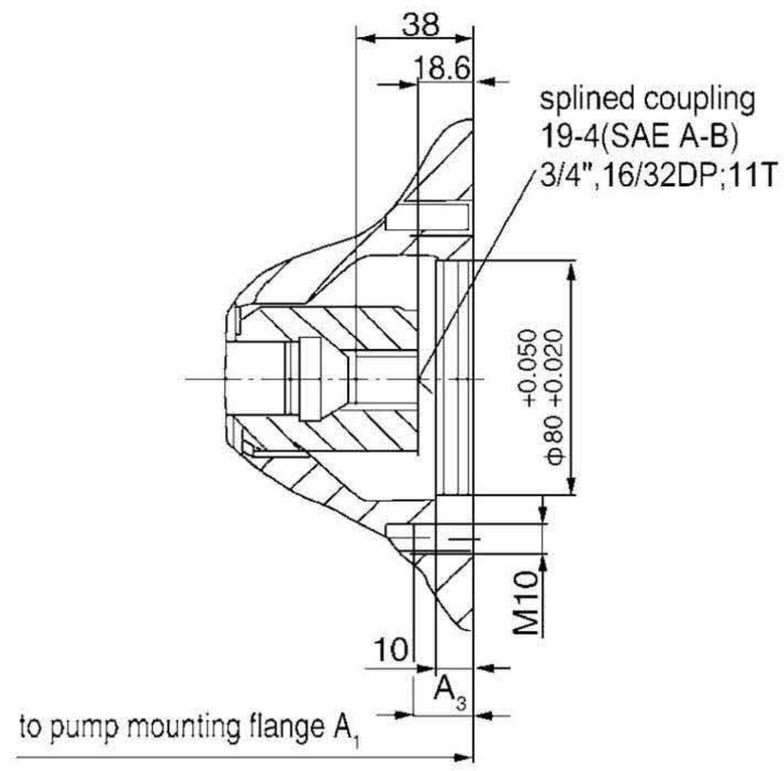

Size main pump	A_1	A_3
18	182	14.5
28	204	16
45	229	16
71	267	20

通轴KB3元件尺寸 Unit Dimensions Through Drives KB3

法兰ISO100,2孔，用于添加A10VSO28泵（花键轴S或R）

Flange ISO 100, 2-hole for built-on A10VSO28 (splined shaft S or R);

订货型号Order code KB3

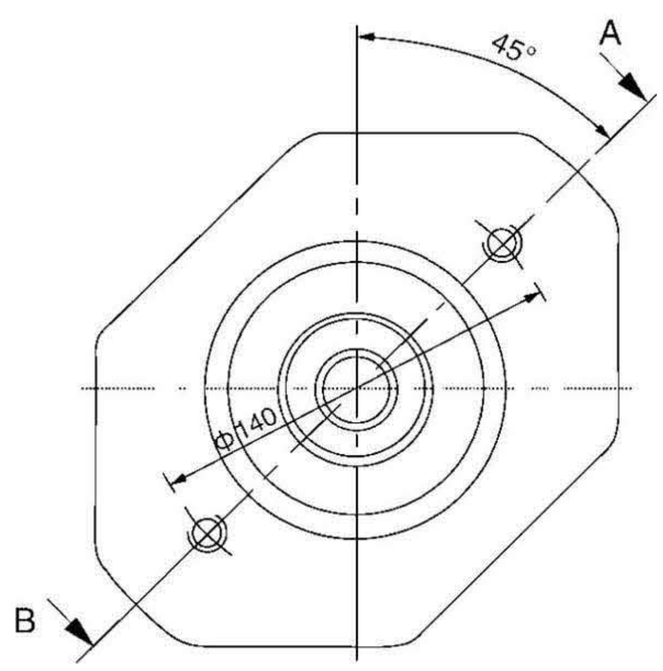

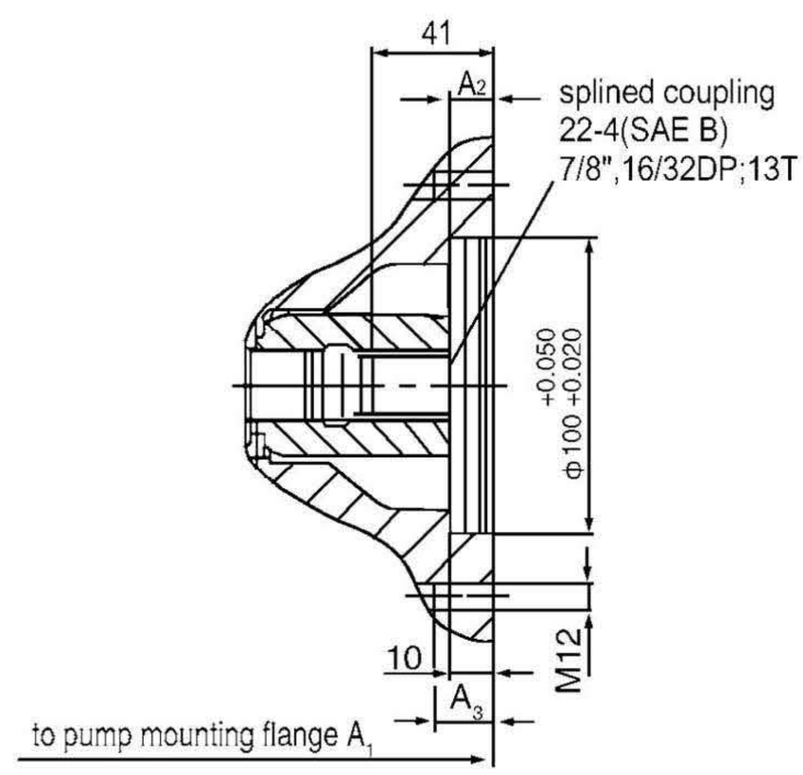

Size main pump	A_1	A_2	A_3
28	204	19.2	14
71	267	16.5	18
100	338	17.6	18
140	350	18.2	24

通轴KB4元件尺寸 Unit Dimensions Through Drives KB4

法兰ISO 100，2孔，用于添加A10VSO45泵(花键轴S或R)

Flange ISO 100, 2-hole for built-on A10VSO 45 (splined S or R);

订货型号Order code KB4

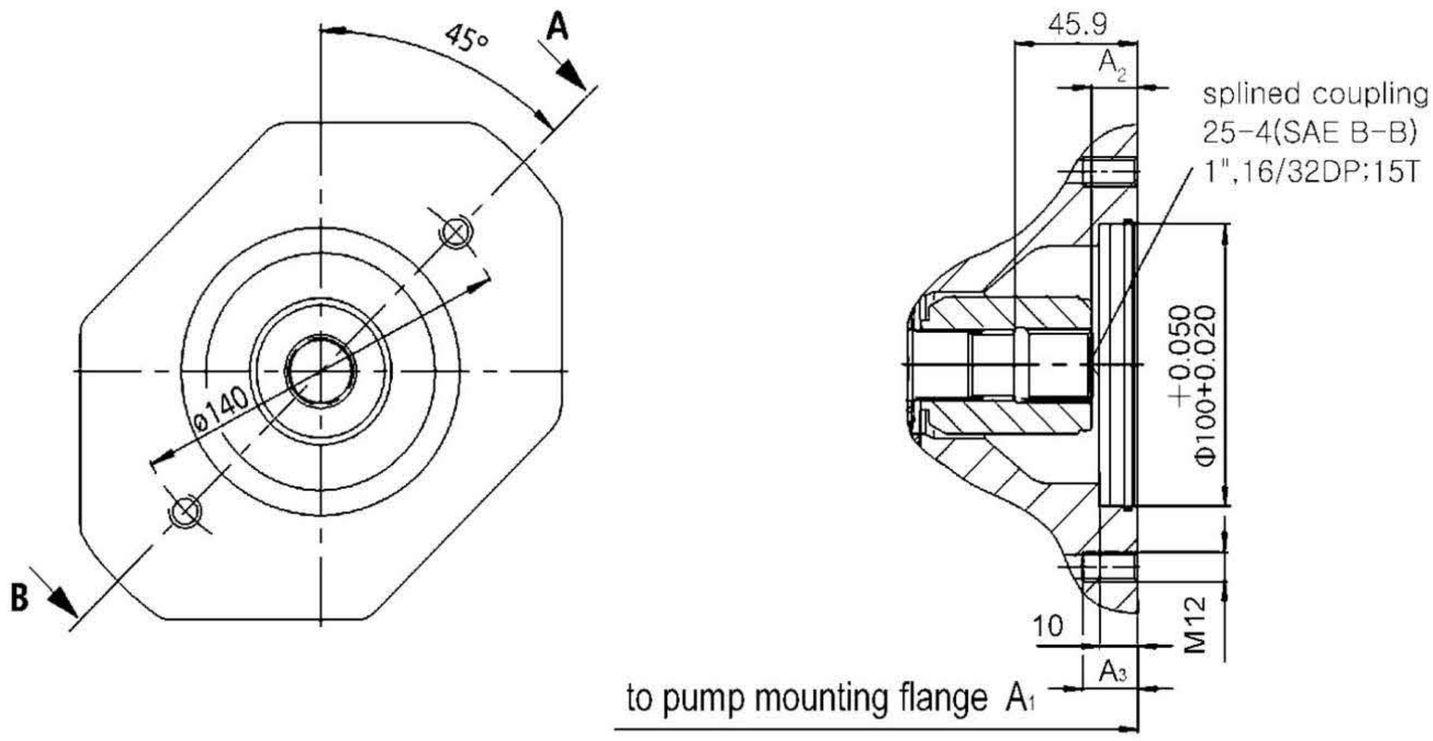

Size main pump	A_1	A_2	A_3
45	229	17.2	14
71	267	17.2	18
100	338	18.2	20
140	350	18.2	24

通轴KB5元件尺寸 Unit Dimensions Through Drives KB5

法兰ISO 125，2孔，用于添加A10VSO71泵(花键轴S或R)

Flange ISO 125, 2-hole for built-on A10VSO 71 (splined shaft S or R);

订货型号Order code KB5

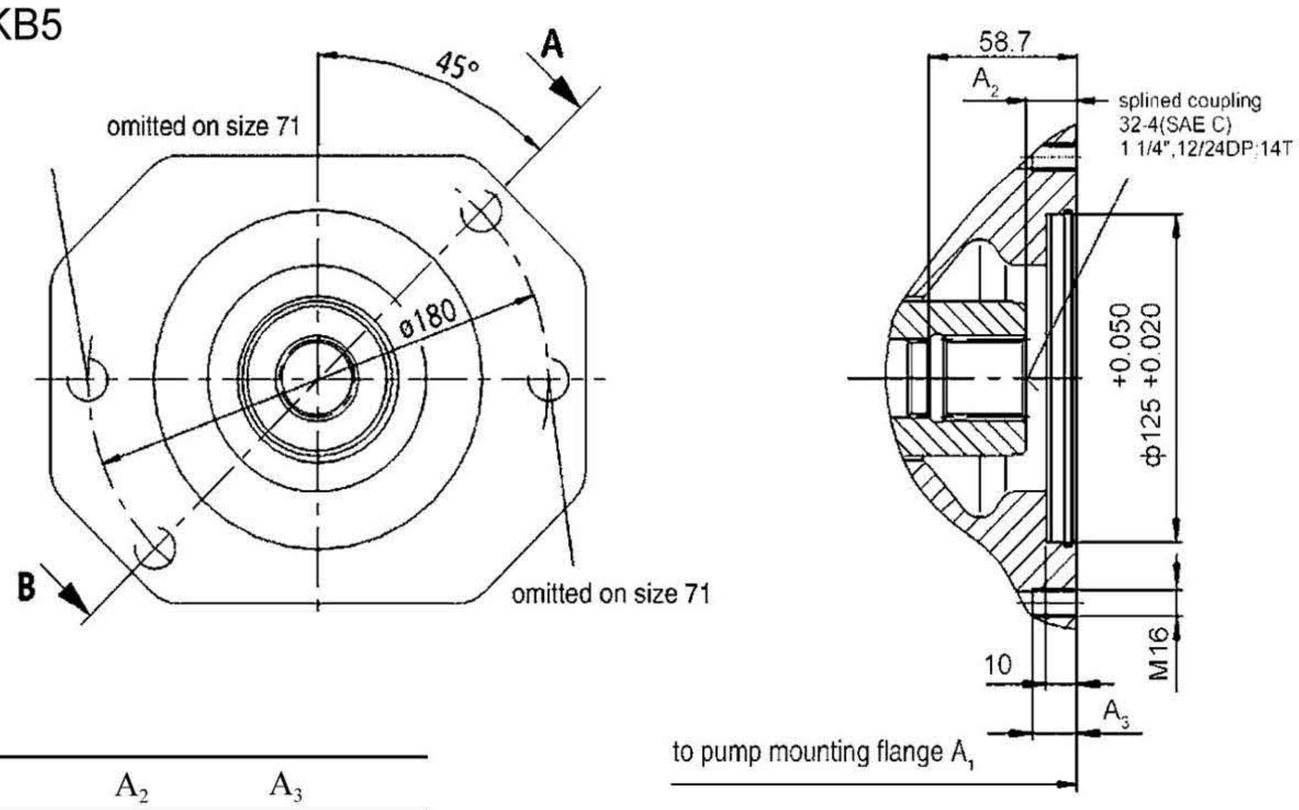

Size main pump	A_1	A_2	A_3
71	267	20	18.5
100	338	20	25
140	350	21	32

通轴KB6元件尺寸 Unit Dimensions Through Drives KB6

法兰ISO 125，2孔，用于添加A10VSO100泵(花键轴S)

Flange ISO 125, 2-hole for built-on A10VSO 100 (splined shaft S);

订货型号Order code KB6

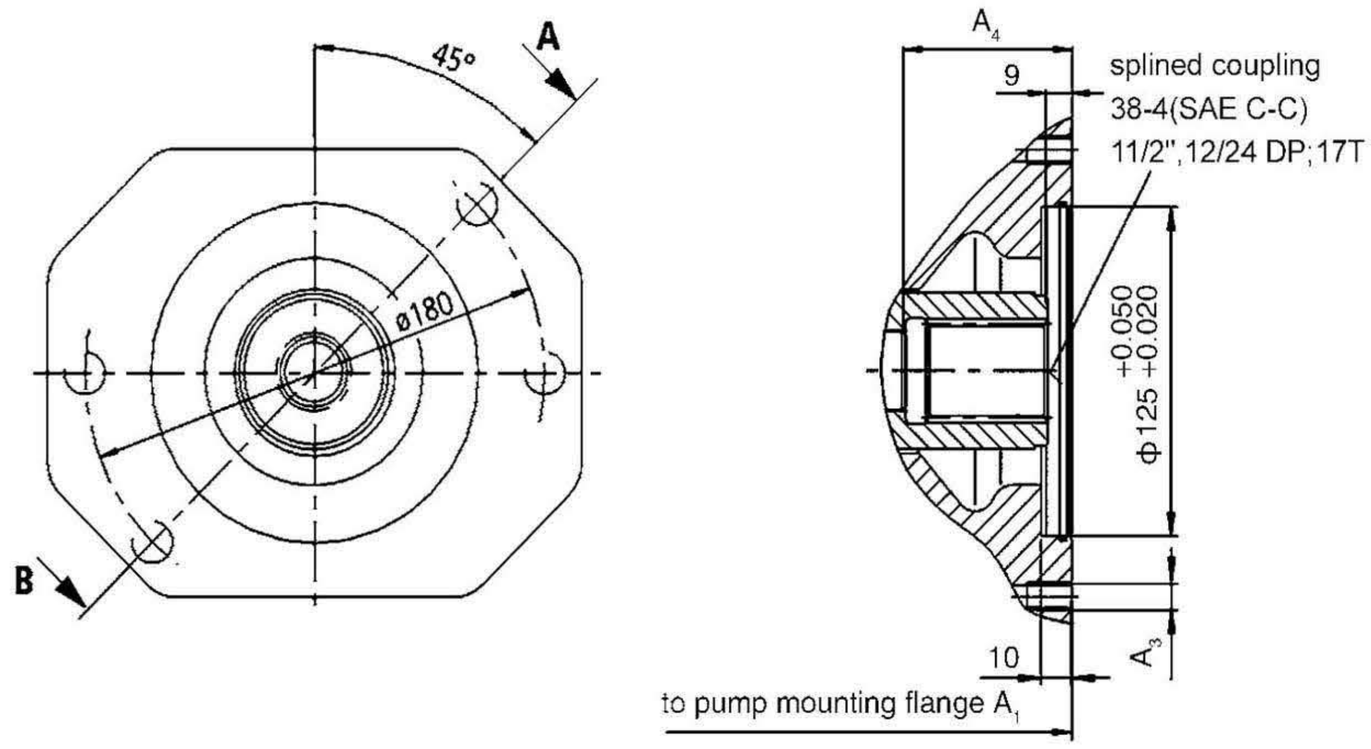

Size main pump	A_1	A_3	A_4
100	338	M16;25deep	65
140	350	M16;32deep	77.3

通轴KB7元件尺寸 Unit Dimensions Through Drives KB7

法兰ISO 180，4孔，用于添加A10VSO140泵(花键轴S)

Flange ISO 180, 4-hole for built-on A10VSO 140 (splined shaft S);

订货型号Order code KB7

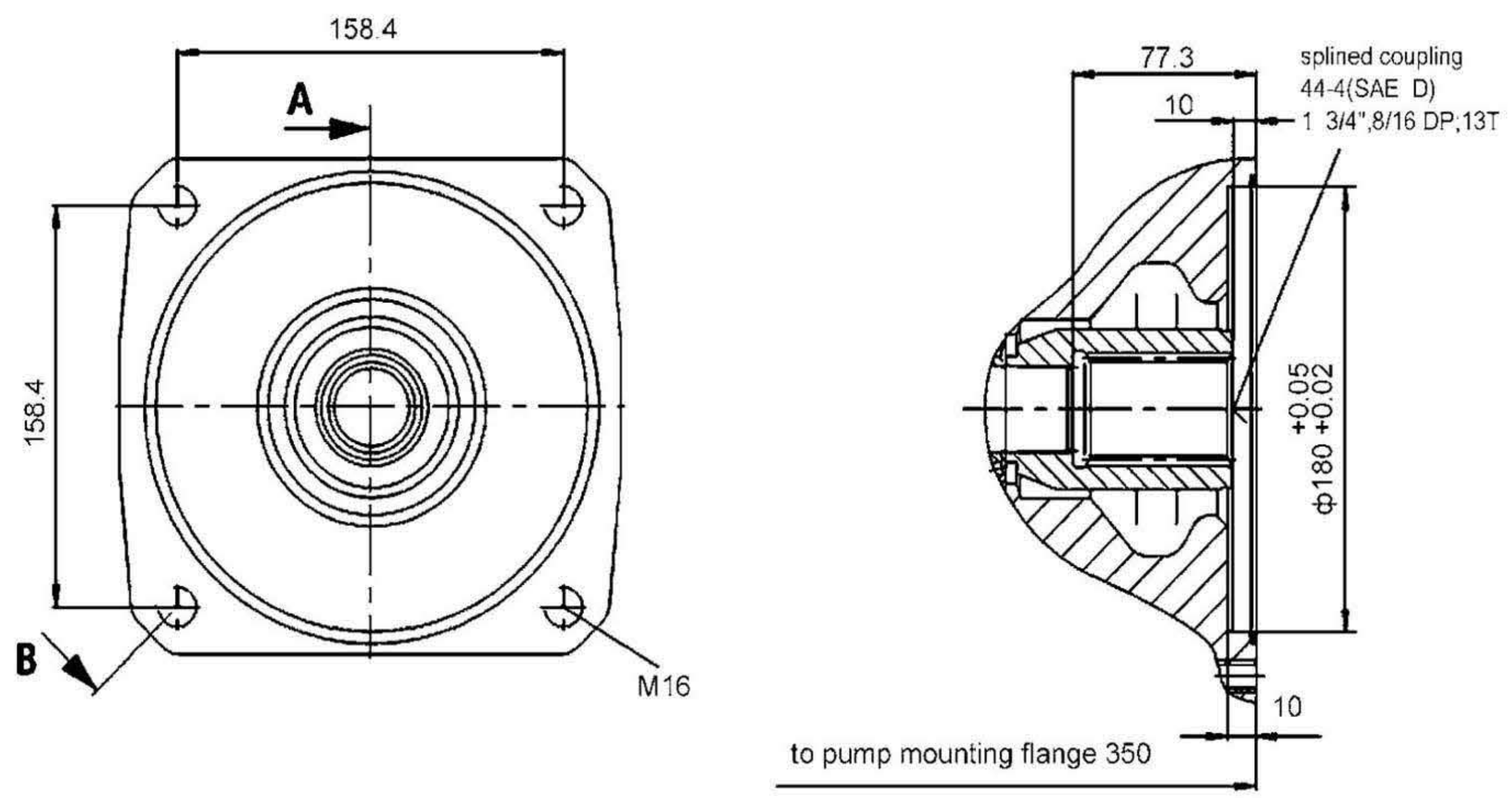

通轴K01元件尺寸 Unit Dimensions Through Drives K01

法兰SAE82-2，(SAE A , 2孔)，用于添加外齿轮泵1PF2G2,用于添加A10VS018泵(轴U,法兰C)

Flange SAE 82-2, SAE A 2-hole for built-on external gear pump 1PF2G2 or A10VSO 18 (shaft U,flange C);

订货型号Order code K01

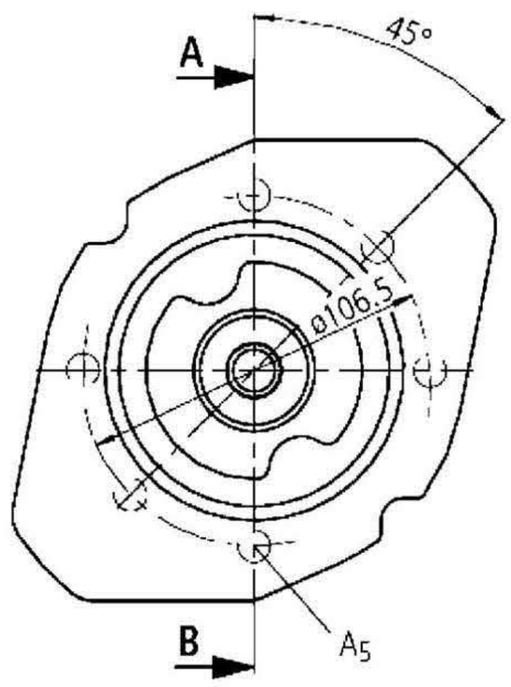

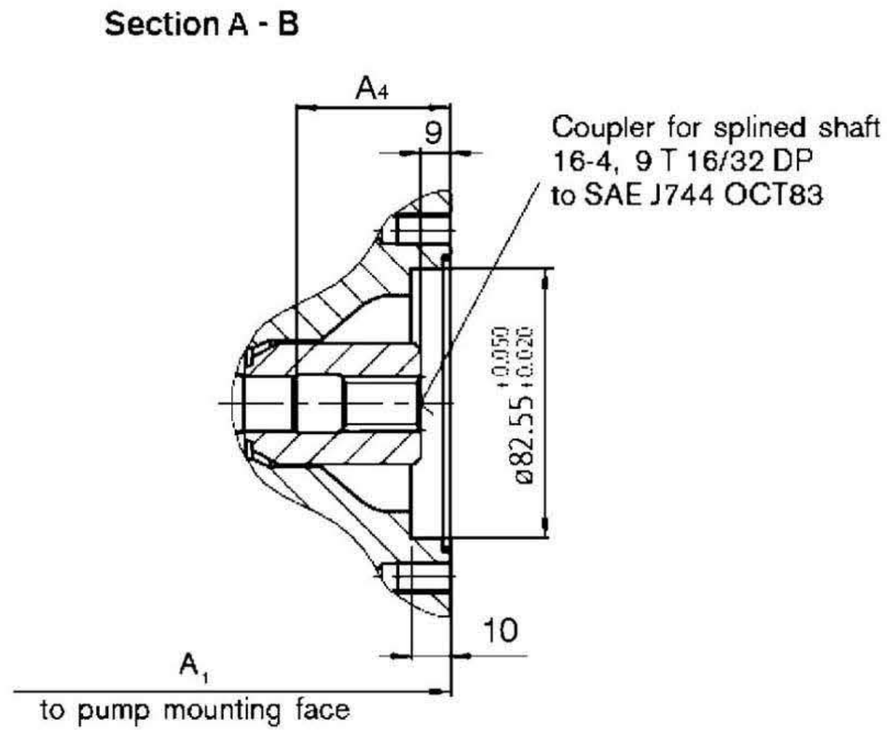

Size main pump	A_1	A_4	A_5
18	182	42	M10;14 deep
28	204	47	M10;14.5 deep
45	229	53	M10;14.5 deep
71	267	61	M10;17 deep
100	338	65	M10;17 deep
140	350	77	M10;17 deep

通轴K52元件尺寸 Unit Dimensions Through Drives K52

法兰SAE 82-2，（SAE A，2 孔），用于添加A10VSO 10 泵或用于添加A10VSO18泵（轴S 或R，法兰C）

Flange SAE 82-2, SAE A 2-hole for built-on A10VSO10(shaft S，flange C) or A10VSO18(shaft S or R，flange C);

订货型号Order code K52

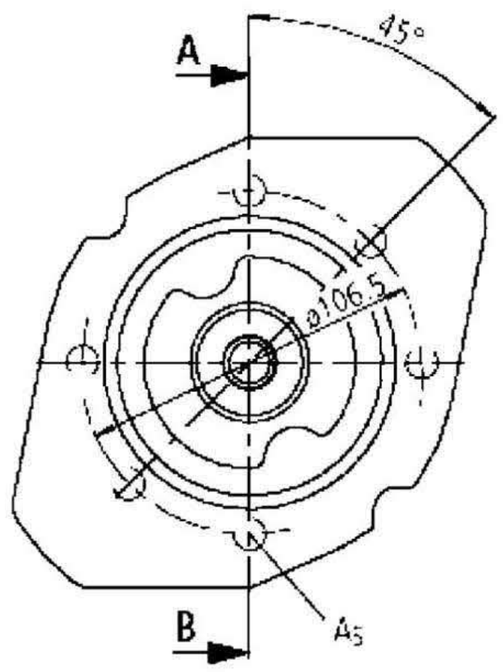

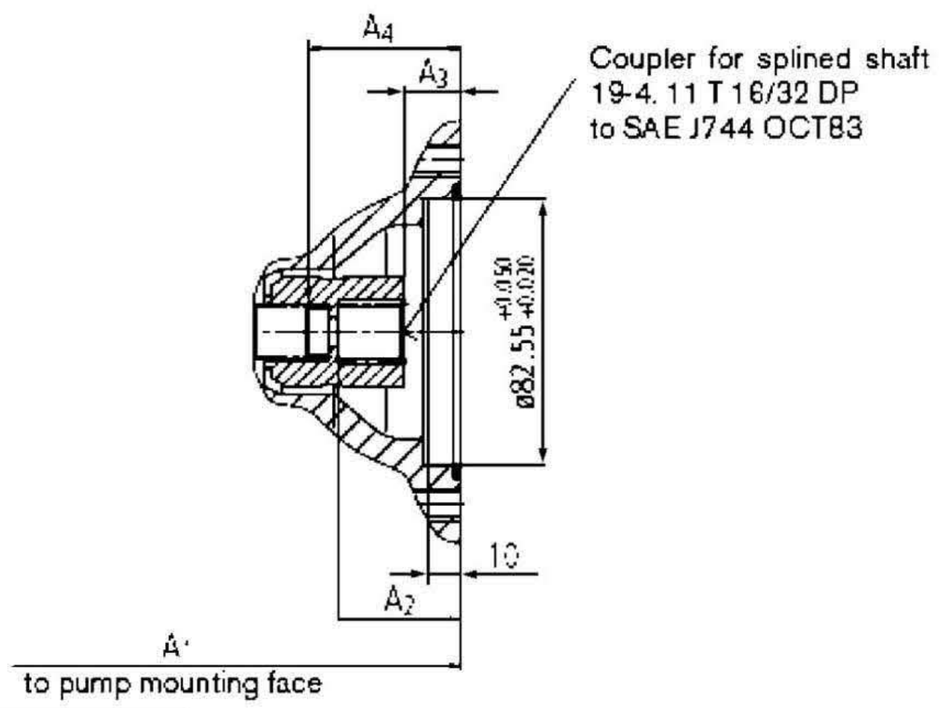

Size main pump	A_1	A_2	A_3	A_4	A_5
18	182	40	17.5	43	M10;16 deep
28	204	39	17.5	47	M10;16 deep
45	229	40.5	17.5	53	M10;16 deep
71	267	40	17.5	61	M10;20 deep
100	338	40	17.5	65	M10;20 deep
140	350	41	17.5	77	M10;20 deep

通轴K02元件尺寸 Unit Dimensions Through Drives K02

法兰SAE 101-2，(SAE B , 2孔)，用于添加外齿轮泵1PF2G3

Flange SAE 101-2, SAE B 2-hole for built-on external gear pump 1PF2G3

订货型号Order code K02

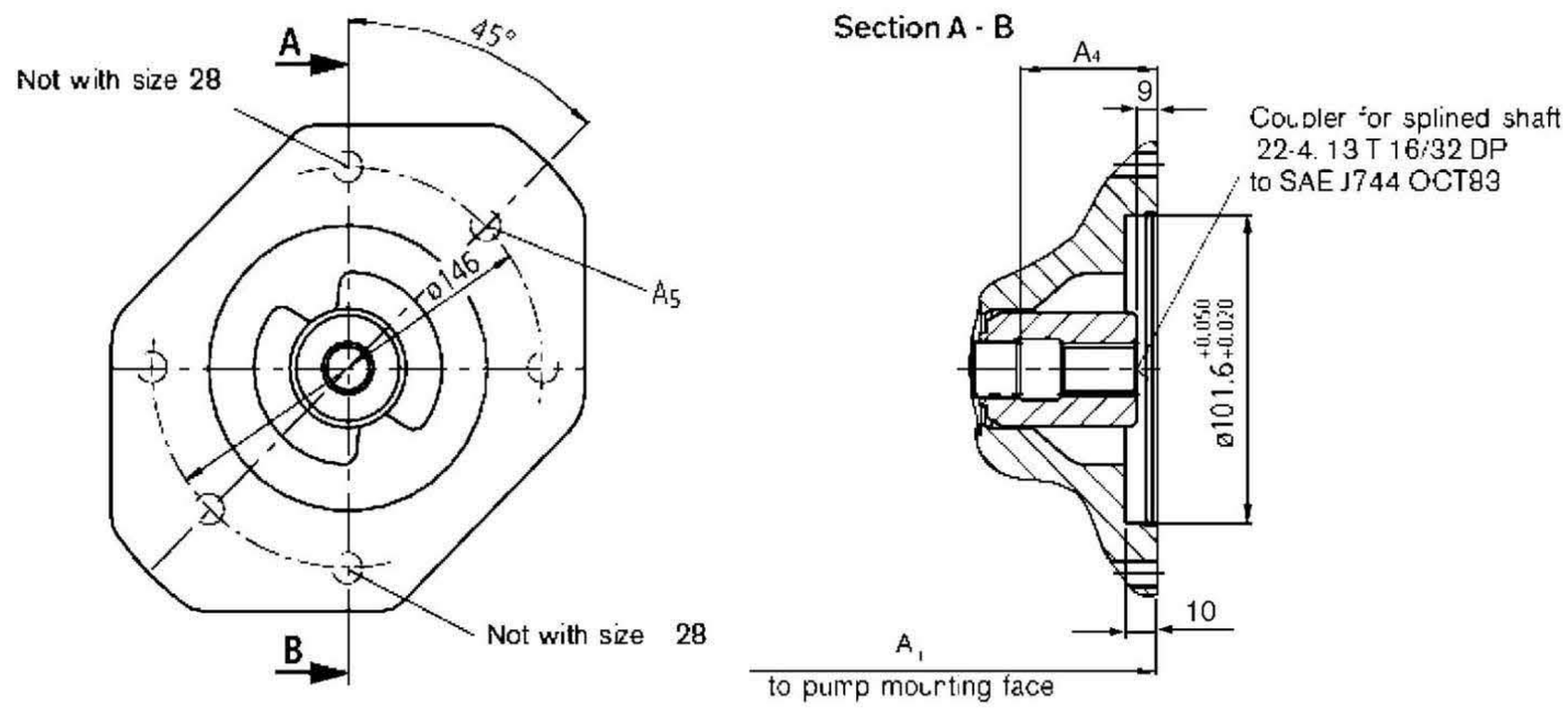

Size main pump	A_1	A_4	A_5
28	204	47	M12;15 deep
45	229	53	M12;18 deep
71	267	61	M12;20 deep
100	338	65	M12;20 deep
140	350	77	M12;20 deep

通轴K68元件尺寸 Unit Dimensions Through Drives K68

法兰SAE 101-2，(SAE B, 2 孔)，用于添加A10VSO28 泵（轴S 或轴R，法兰C）

Flange SAE 101-2, SAE B 2-hole for built-on A10VSO28(shaft S or R£¬flange C)

订货型号Order code K68

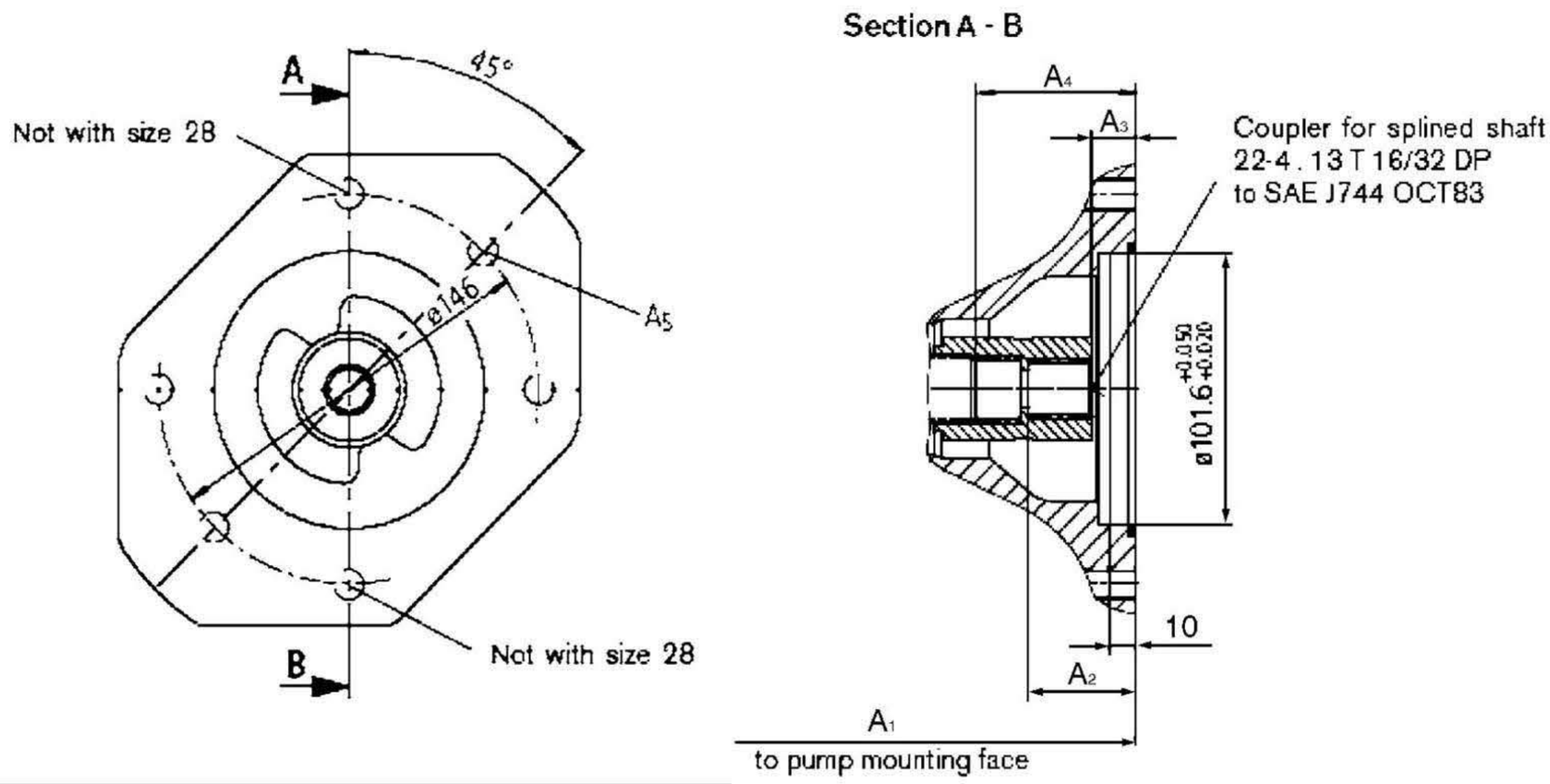

Size main pump	A_1	A_2	A_3	A_4	A_5
28	204	43	16.5	47	M12;15 deep
45	229	42	16.5	53	M12;18 deep
71	267	43	16.5	61	M12;20 deep
100	338	41	16.5	65	M12;20 deep
140	350	44	16.5	77	M12;20 deep

通轴K04元件尺寸 Unit Dimensions Through Drives K04

法兰SAE 101-2，(SAE B，2 孔)，用于添加A10VSO45 泵（轴S 或轴R，法兰C）

Flange SAE 101-2, SAE B 2-hole for built-on A10VSO28(shaft S or R , flange C)

订货型号Order code K04

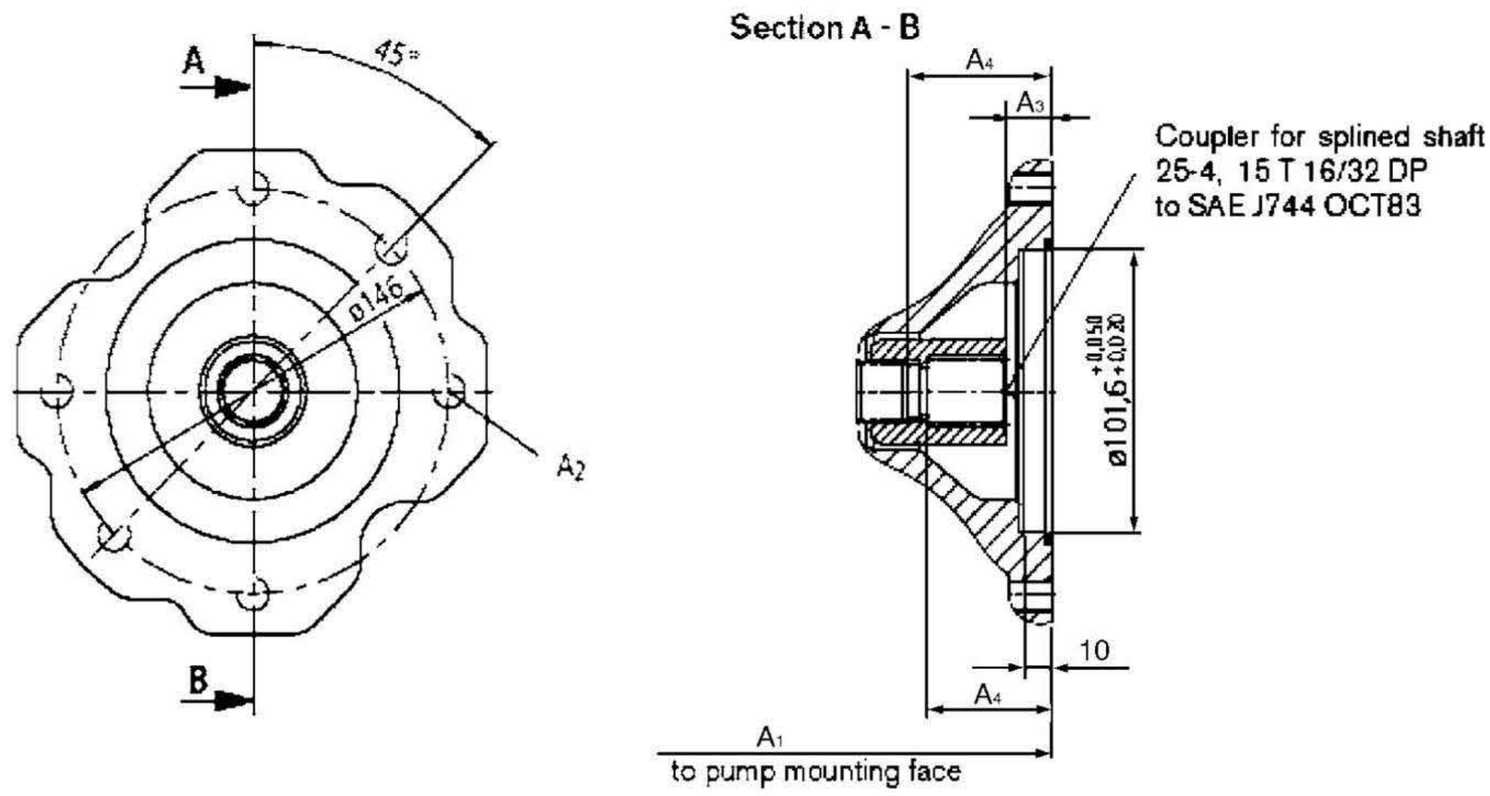

Size main pump	A_1	A_2	A_3	A_4	A_5
45	229	47.5	16.9	53	M12;18deep
71	267	47.5	16.9	61	M12;20deep
100	338	47.5	16.9	65	M12;20deep

通轴K07元件尺寸 Unit Dimensions Through Drives K07

法兰SAE 127-2，(SAE C，2 孔)，用于添加A10VSO71 泵（轴S 或轴R，法兰C）

Flange SAE 127-2, SAE C 2-hole for built-on A10VSO71(shaft S or R ，flange C)

订货型号Order code K07

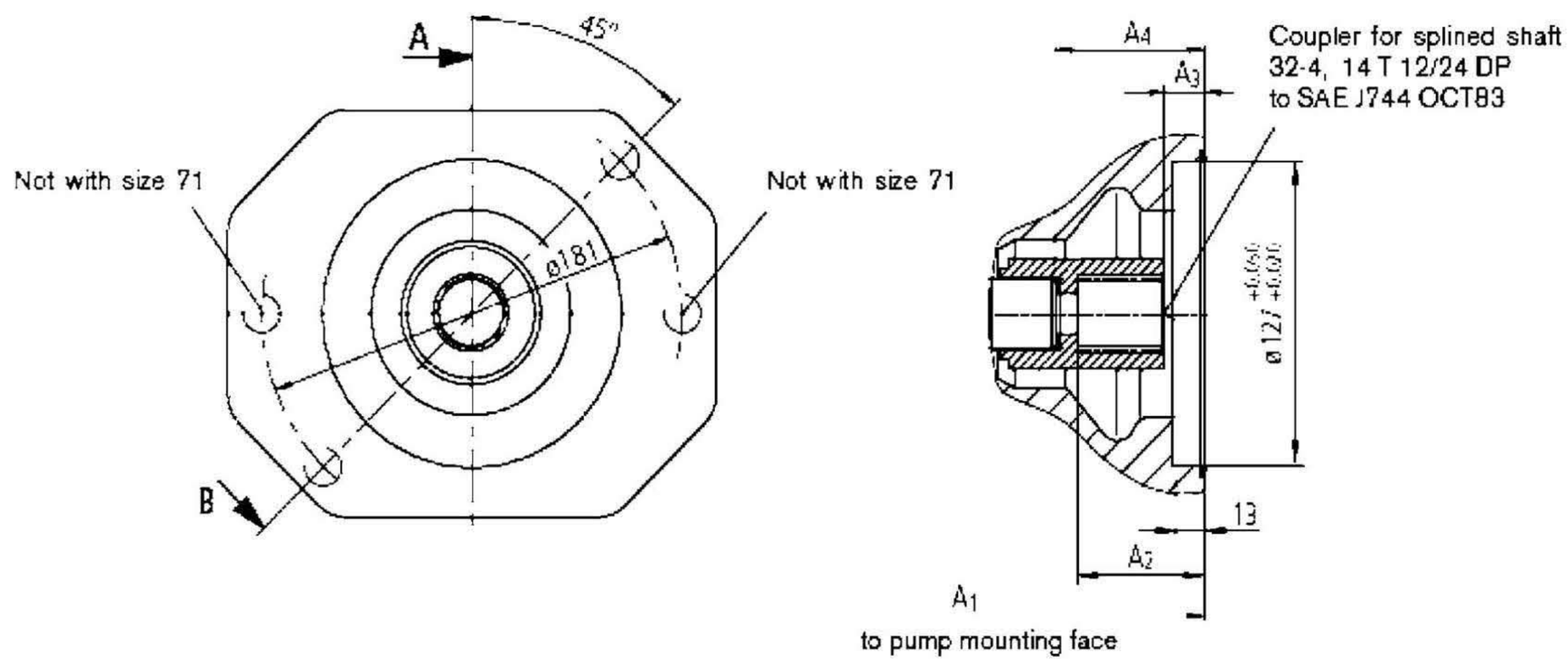

Size main pump	A_1	A_2	A_3	A_4	A_5
71	267	55.5	17.9	61	M16;18deep
100	338	57	17.9	65	M16;25deep
140	350	60	17.9	77	M16;32deep

通轴K24元件尺寸 Unit Dimensions Through Drives K24

法兰SAE 127-2，(SAE C，2 孔)，用于添加A10VSO100 泵（轴S，法兰C）

Flange SAE 127-2, SAE C 2-hole for built-on A10VSO100(shaft S , flange C)

订货型号Order code K24

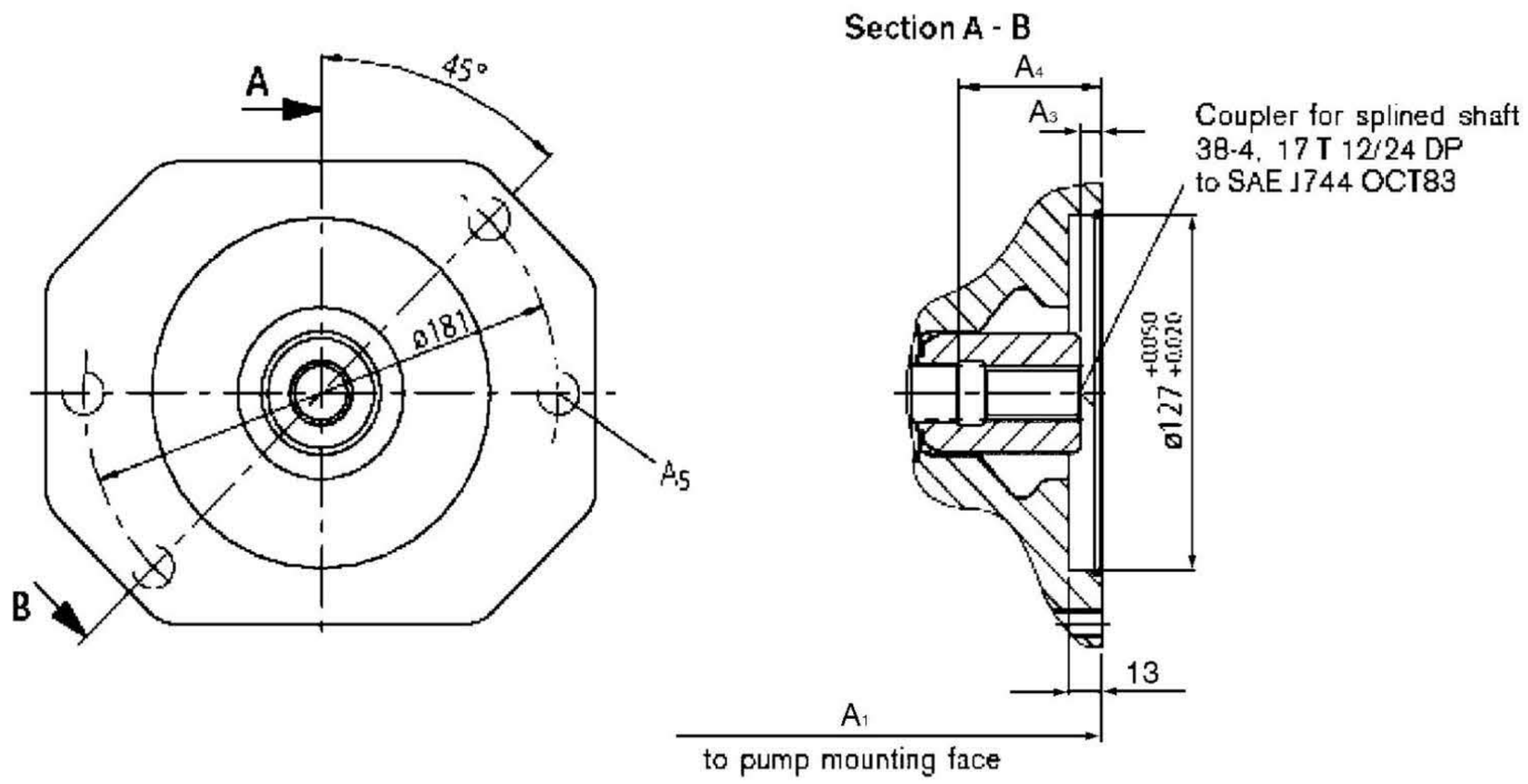

Size main pump	A_1	A_3	A_4	A_5
100	338	8	65	M16;20deep
140	350	9	77.3	M16;32deep

通轴K17元件尺寸 Unit Dimensions Through Drives K17

法兰SAE 154-4，(SAE D，4 孔)，用于添加A10VSO140 泵（轴S，法兰D）

Flange SAE 154-4, SAE D 4-hole for built-on A10VSO140(shaft S ,flange D)
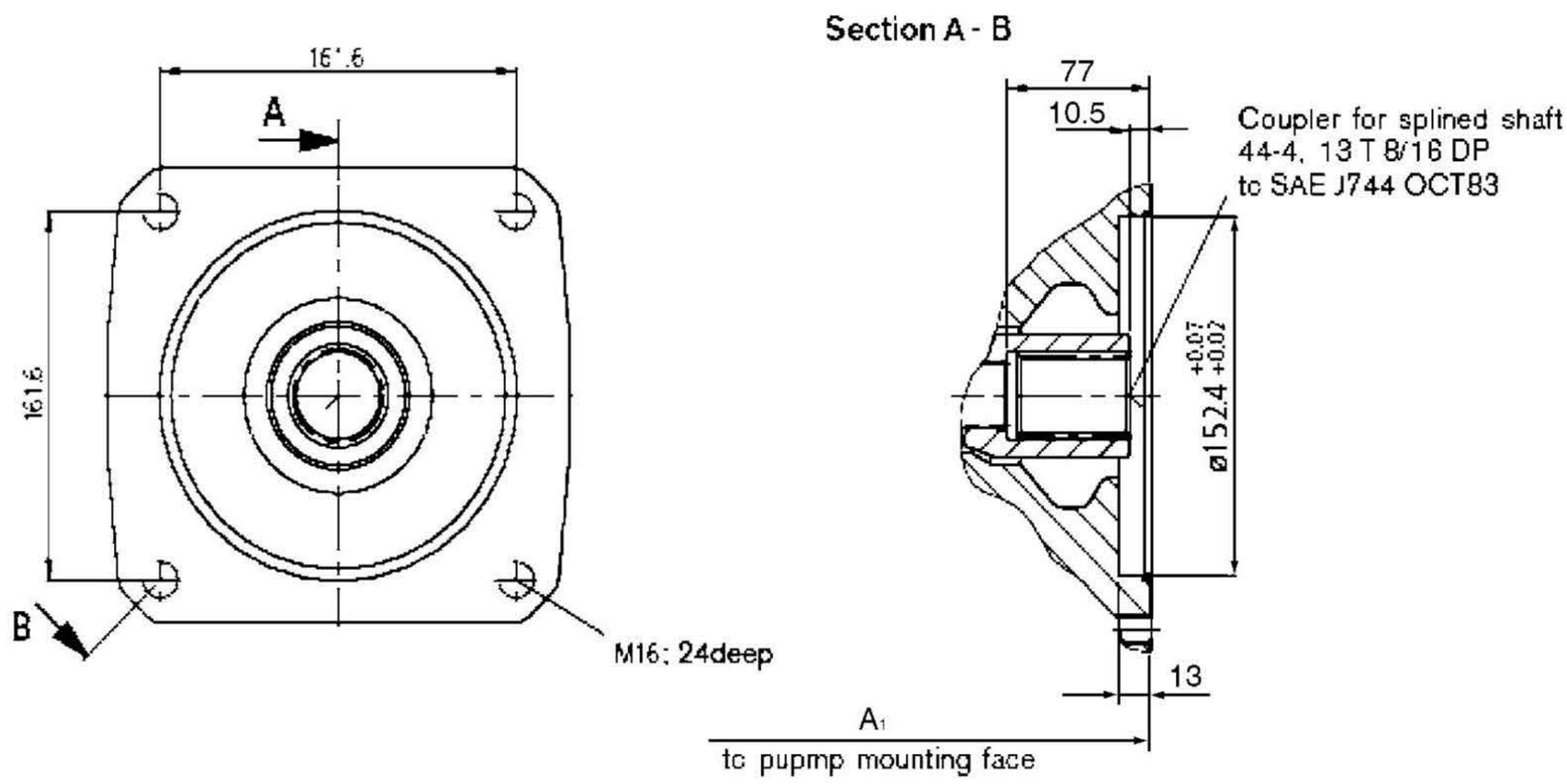
订货型号Order code K17